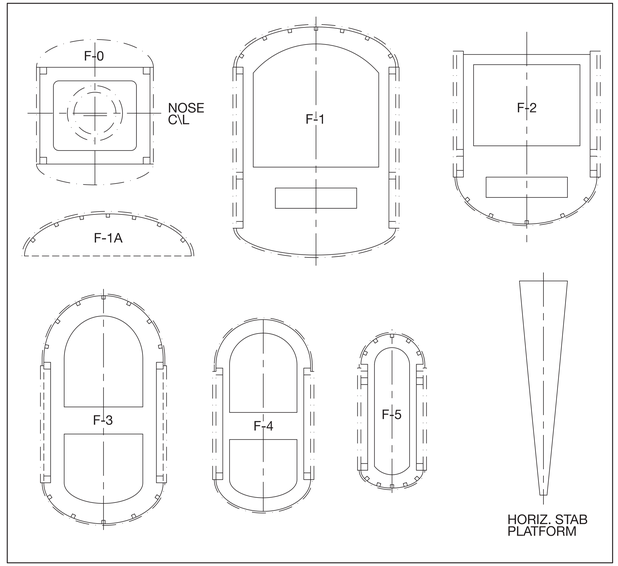

FUSELAGE FORMERS
(1/8" LITE PLY)

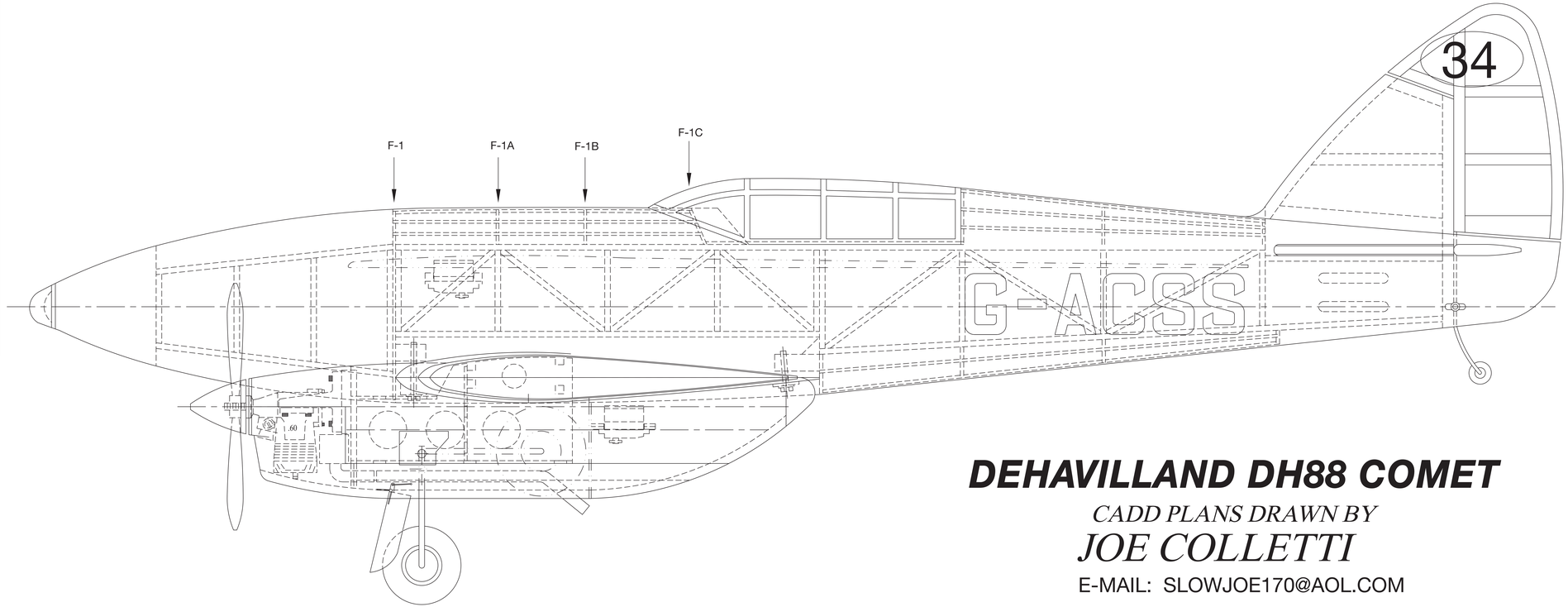

NOTES:

1. ALL WOOD SIZES INDICATED ARE FOR THE 93" WINGSPAN VERSION OF THIS MODEL ONLY.

2. THE WING CENTER SECTION IS BUILT UPSIDE DOWN IN ORDER TO INSTALL THE ENGINE POD ASSEMBLIES.

DEHAVILLAND DH88 COMET

CADD PLANS DRAWN BY
JOE COLLETTI
E-MAIL: SLOWJOE170@AOL.COM

G-ACSS

SHEET 2

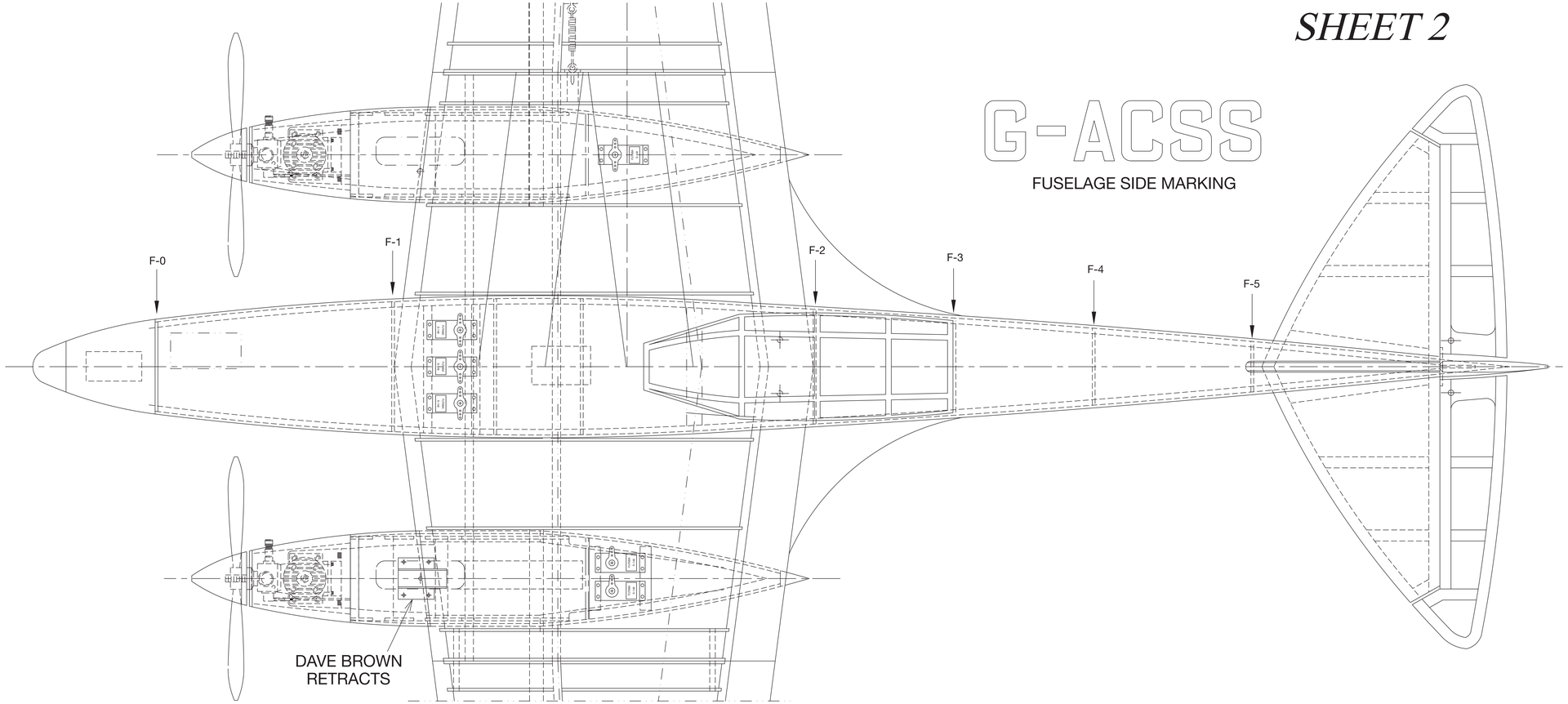

NOTES:

1. ALL WOOD SIZES INDICATED ARE FOR THE 93" WINGSPAN VERSION OF THIS MODEL ONLY.

2. THE WING CENTER SECTION IS BUILT UPSIDE DOWN IN ORDER TO INSTALL THE ENGINE POD ASSEMBLIES.

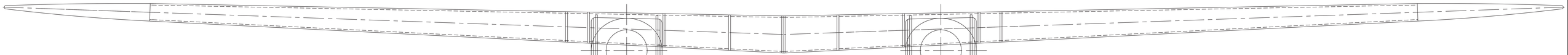

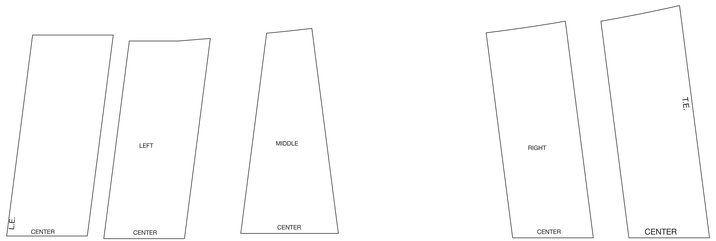

NOTES:

1. ALL WOOD SIZES INDICATED ARE FOR THE 93" WINGSPAN VERSION OF THIS MODEL ONLY.

2. THE WING CENTER SECTION IS BUILT UPSIDE DOWN IN ORDER TO INSTALL THE ENGINE POD ASSEMBLIES.

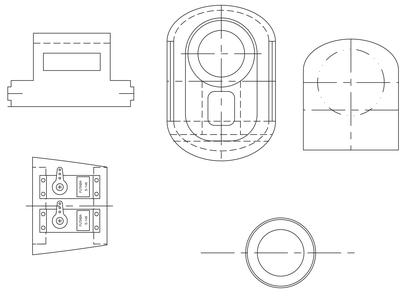

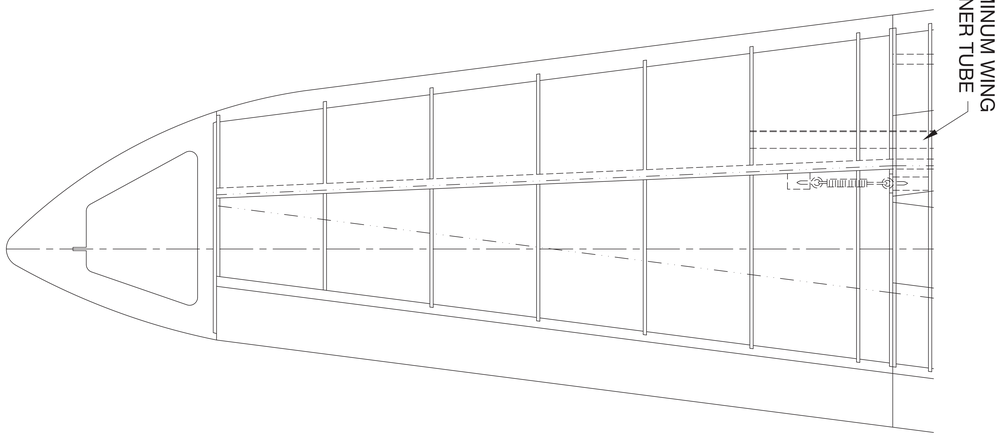

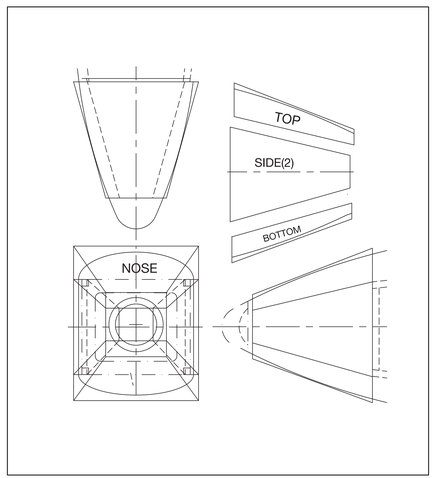

NOSE FRAMING

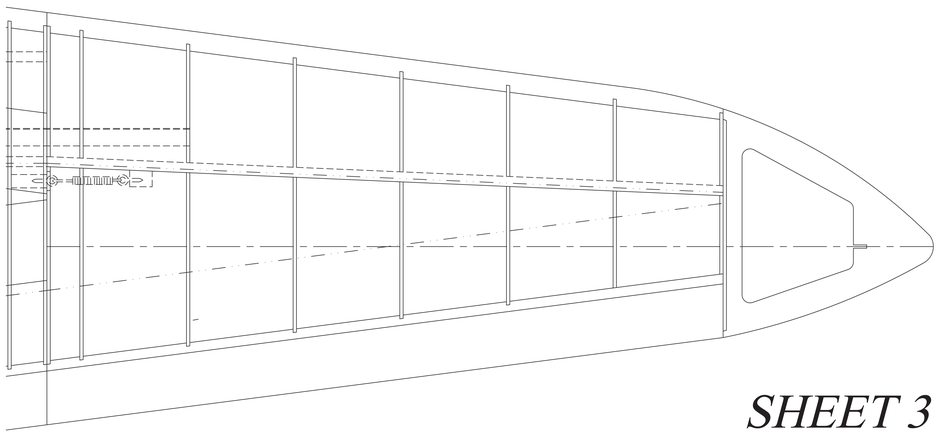

SHEET 3

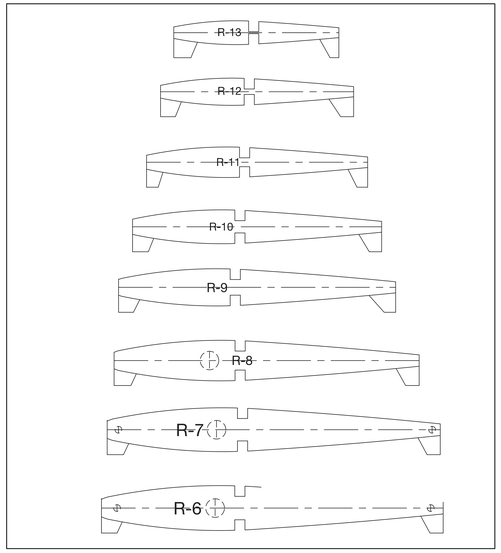

OUTER WING PANEL RIBS
(3/32" BALSA)

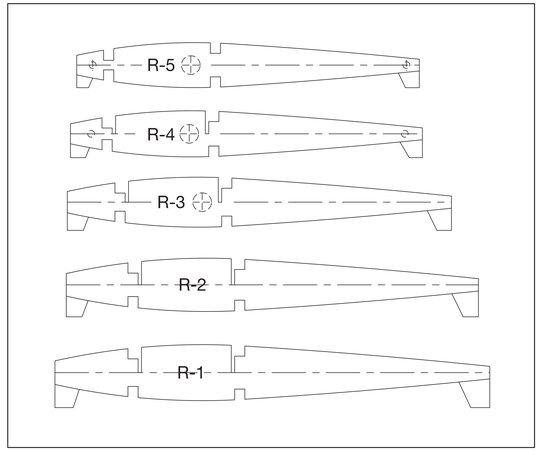

WING CENTER RIBS
(1/8" BALSA)

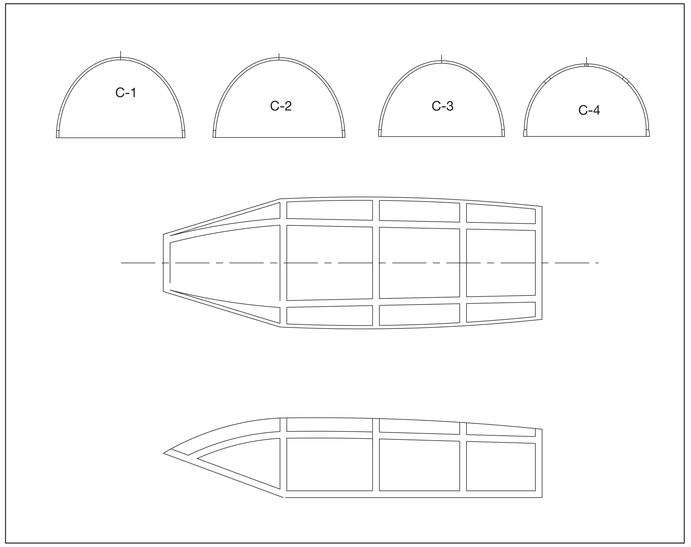

CANOPY FRAMING

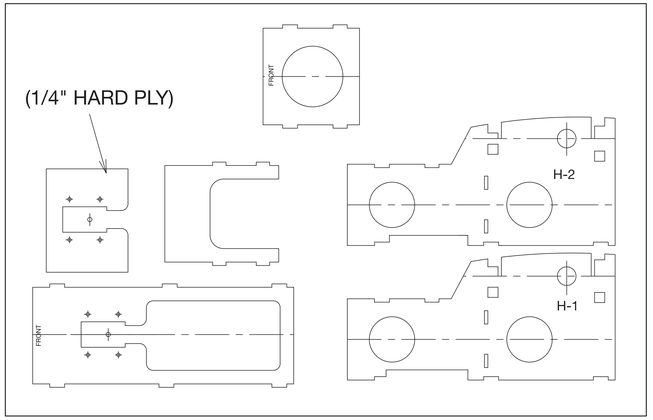

PLYWOOD ENGINE POD COMPONENTS
(1/8" LITE PLY)

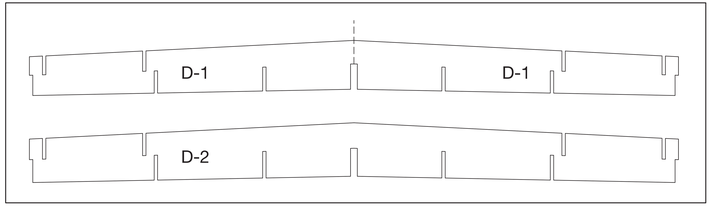

PLYWOOD WING CROSSBRACES
(1/8" AIRCRAFT PLY)

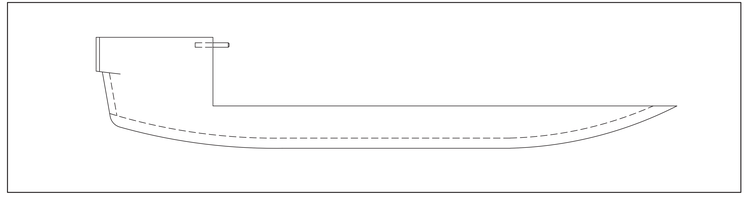

BELLYPAN SIDE VIEW

NOTES:

1. ALL WOOD SIZES INDICATED ARE FOR THE 93" WINGSPAN VERSION OF THIS MODEL ONLY.

2. THE WING CENTER SECTION IS BUILT UPSIDE DOWN IN ORDER TO INSTALL THE ENGINE POD ASSEMBLIES.

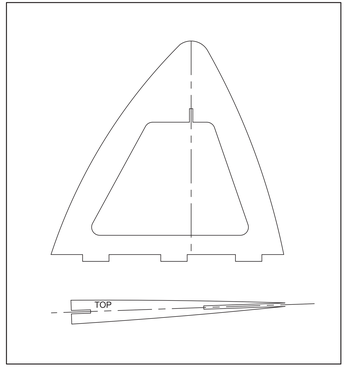

WING TIP COMPONENTS
(1/8" LITE PLY)

SHEET 4