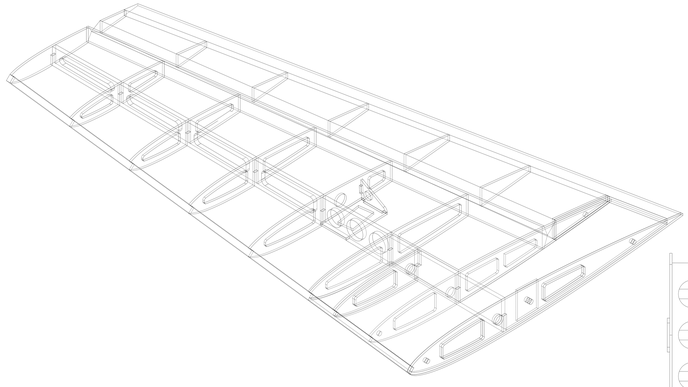

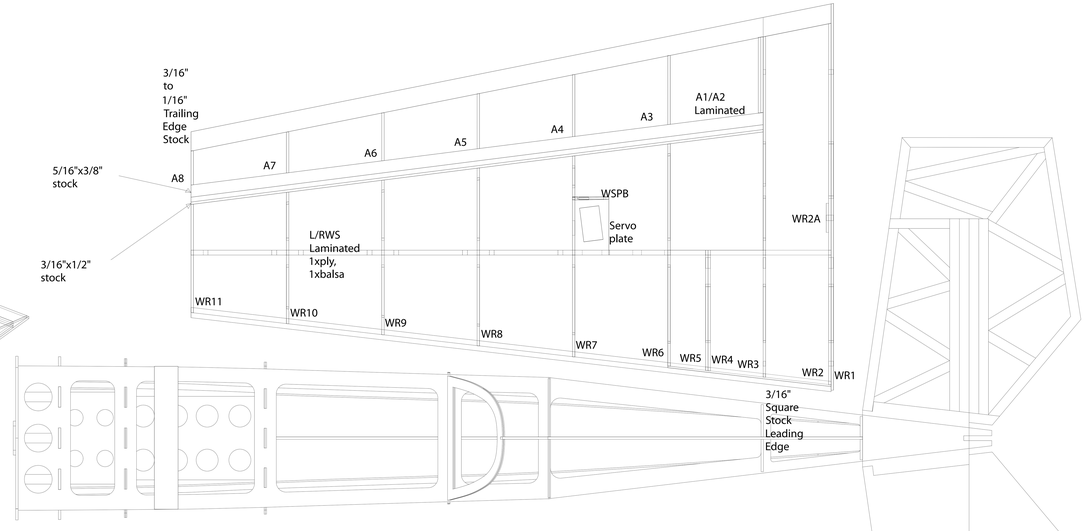

eYak Canopy Templates
email js_1972@hotmail.com for questions.

John S

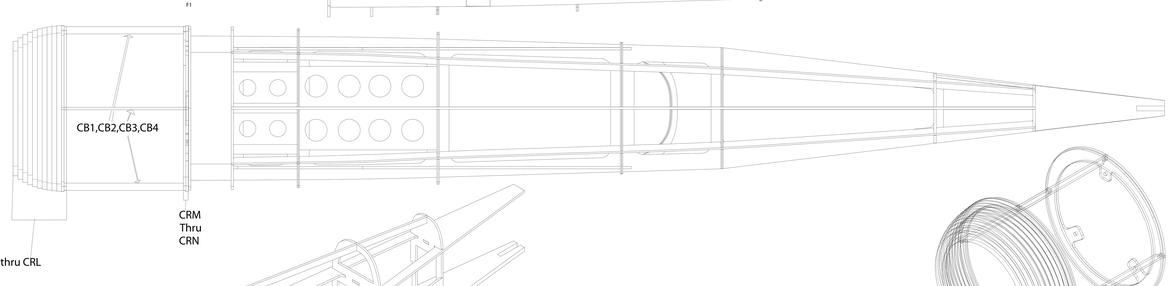

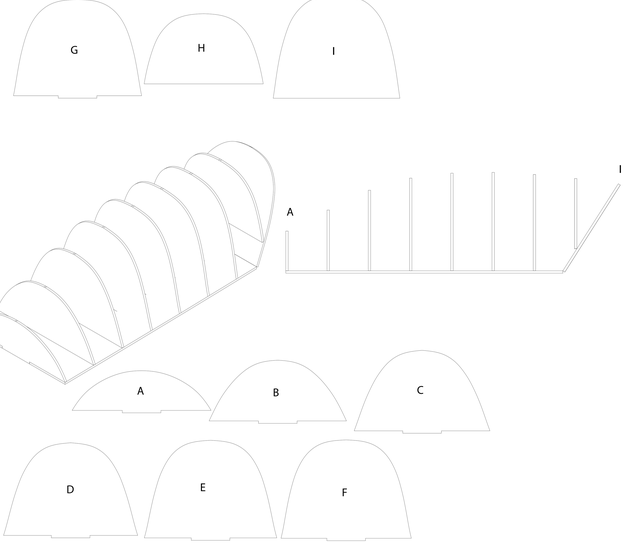

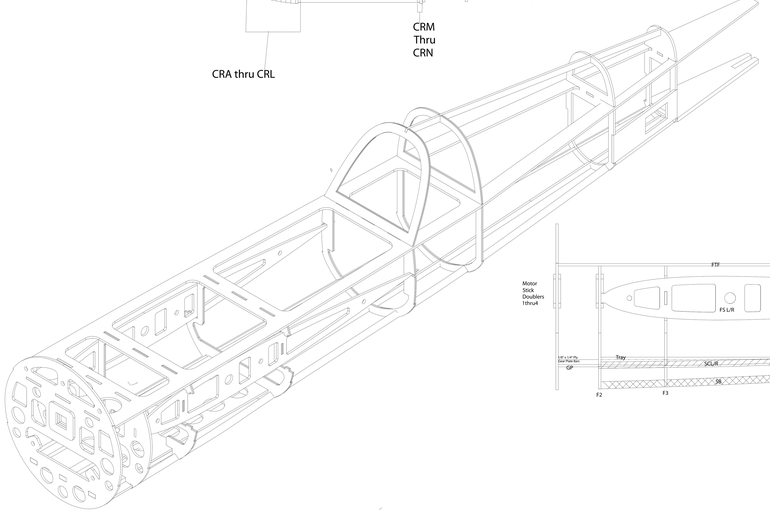

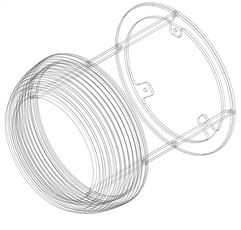

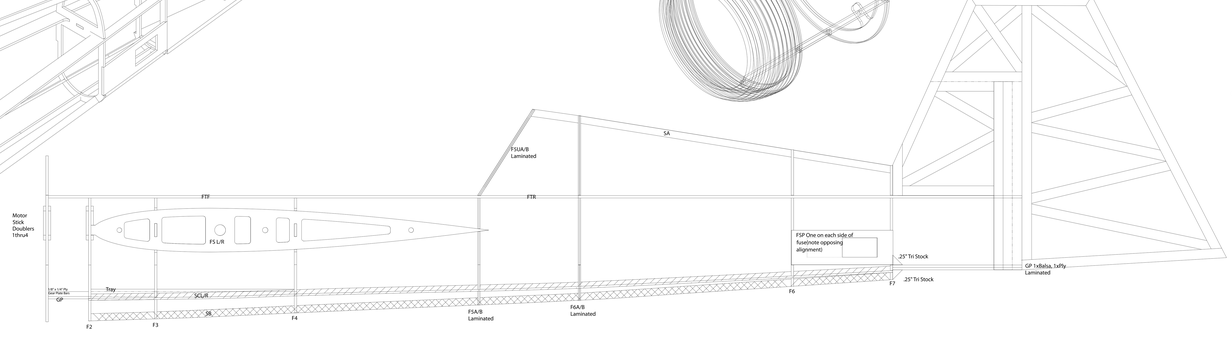

1x16" Balsa
4"x48"

1x16" Balsa

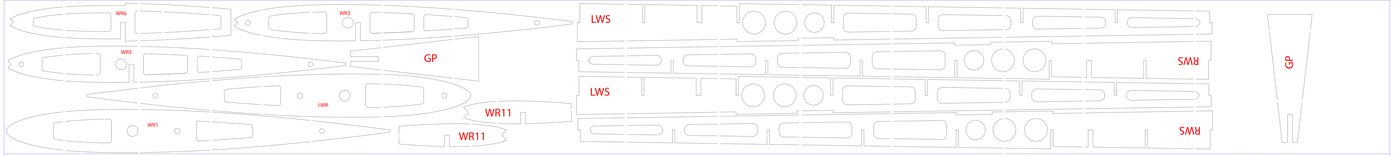

1/16"
Balsa

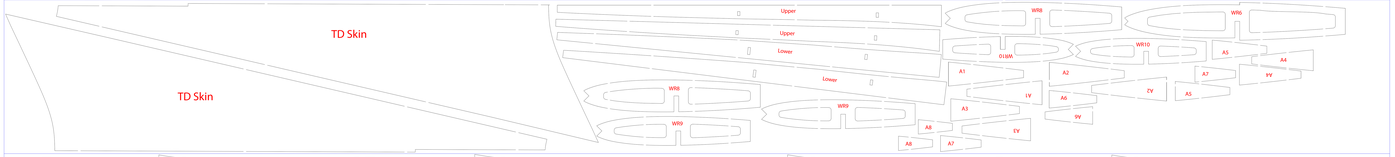

1x16" Balsa
4"x36"

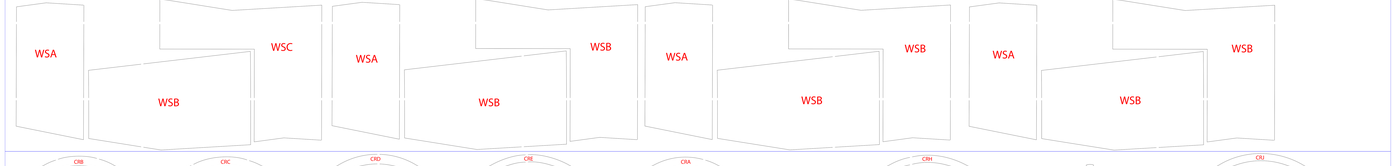

1x8" Balsa
4"x36"

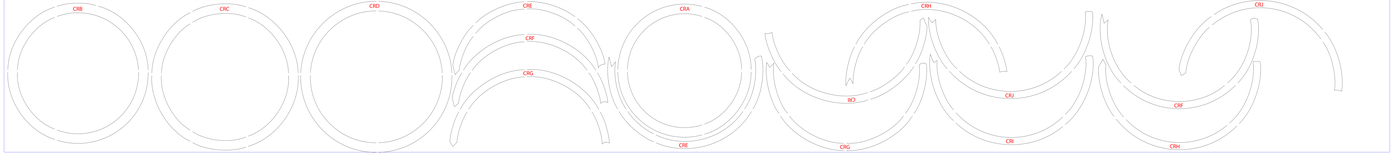

1/16" Ply
Grain
--->
6"x24"

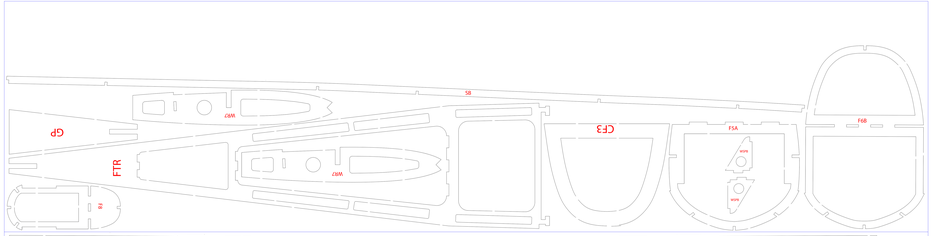
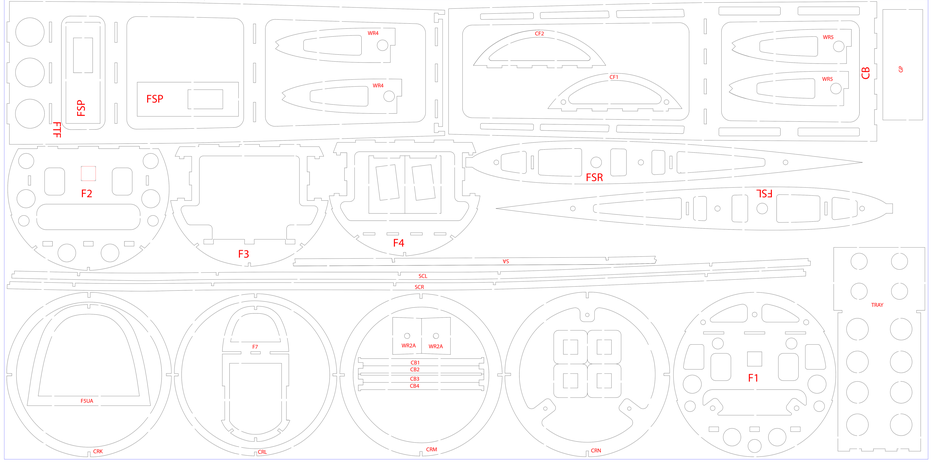
1/16" Ply
Grain
--->
12"x24"