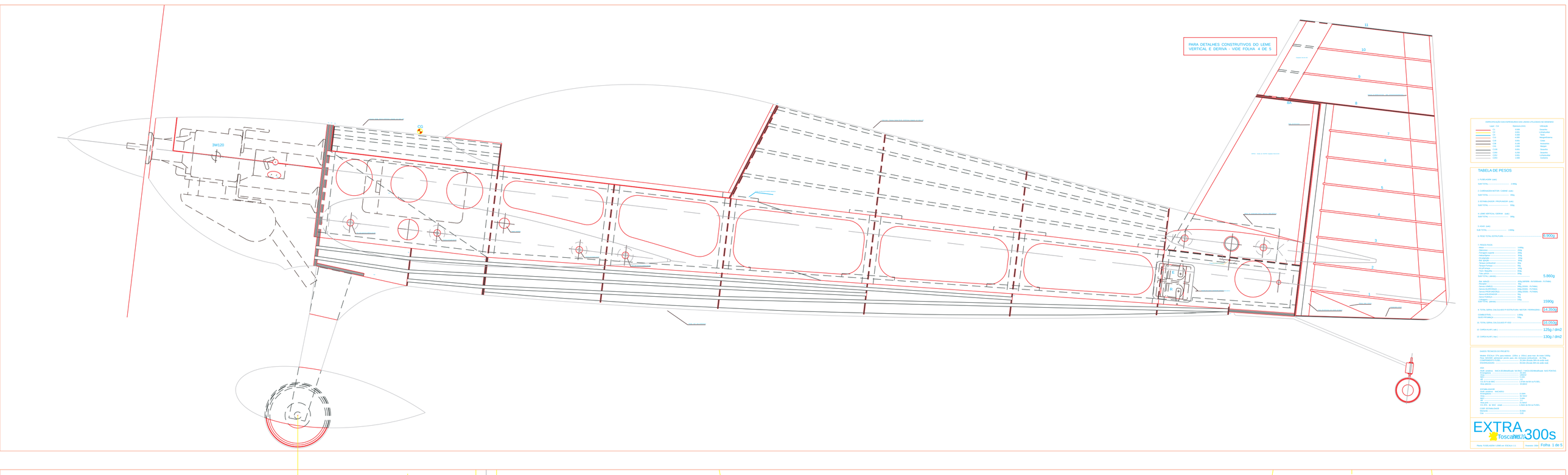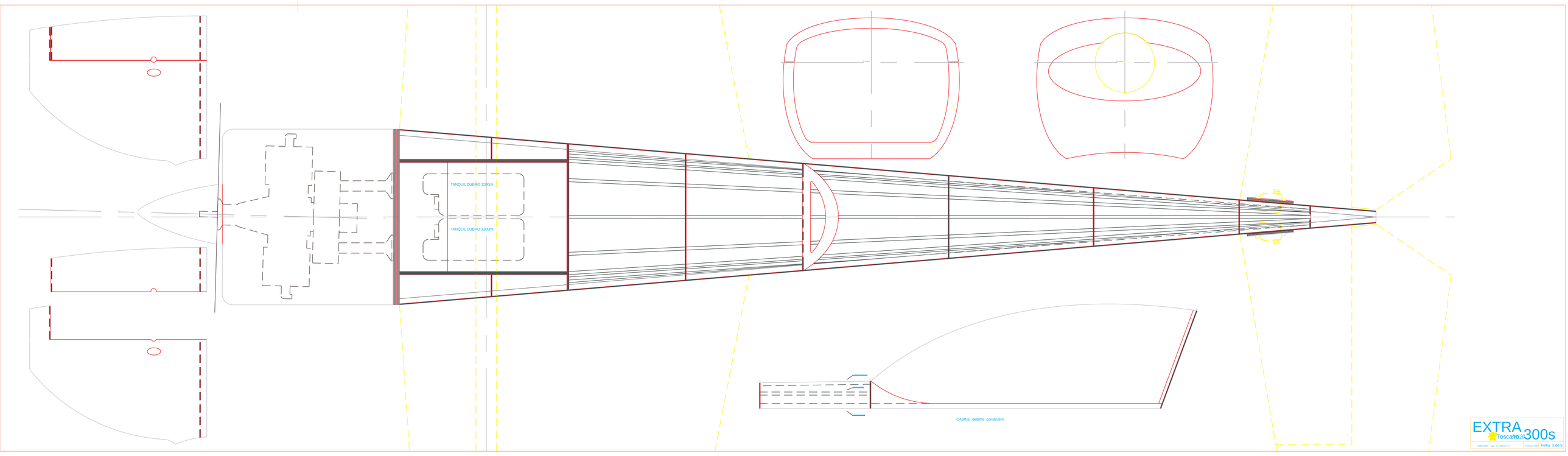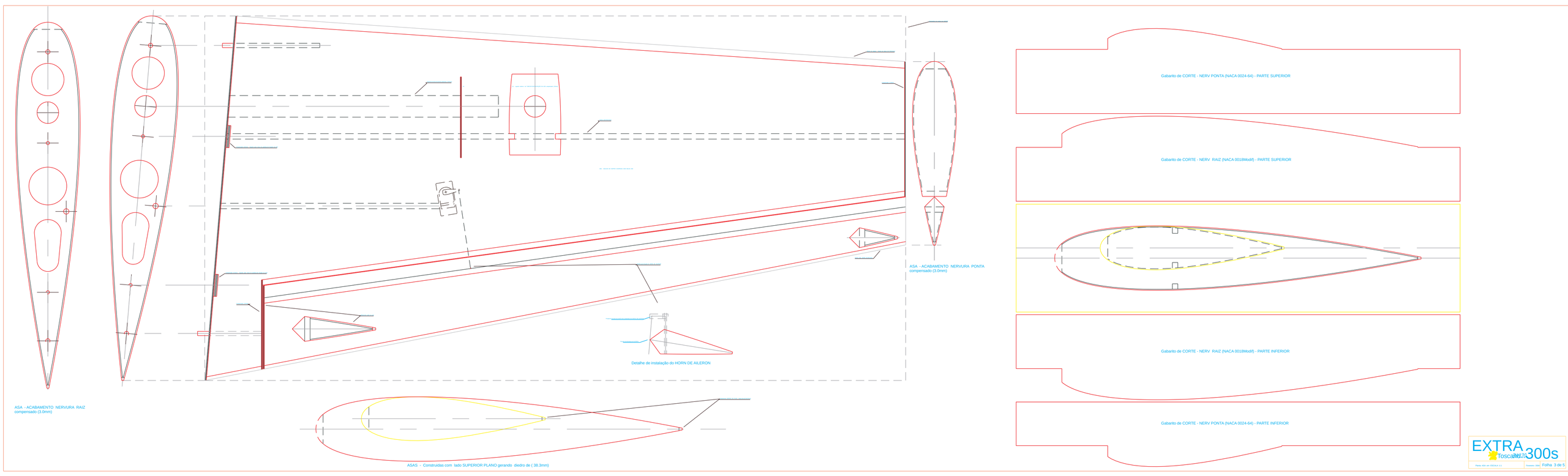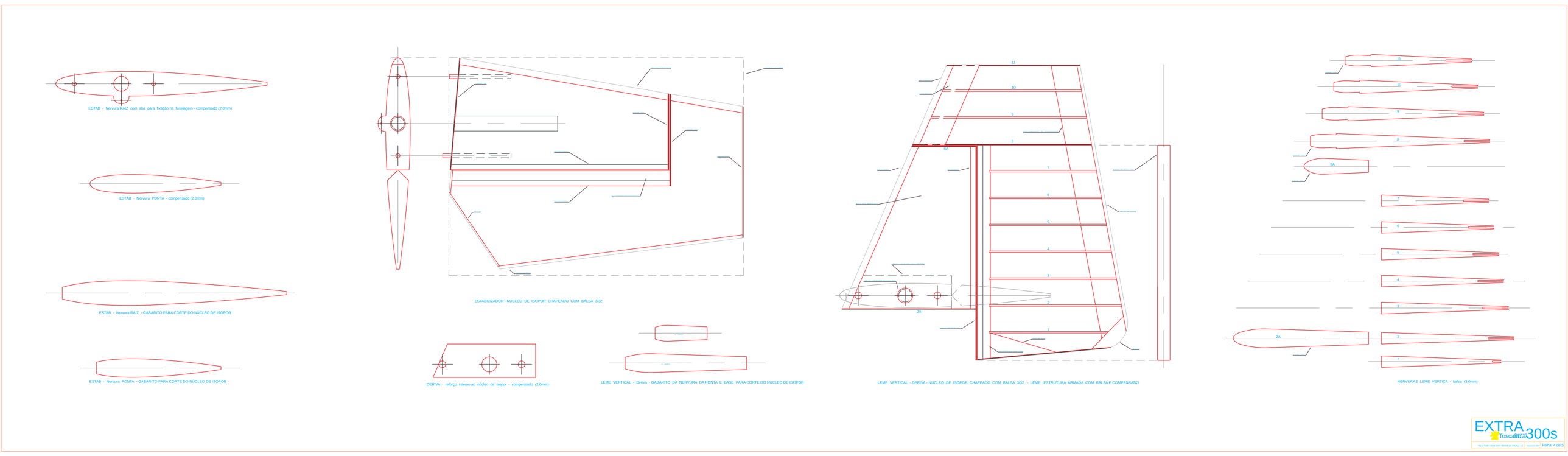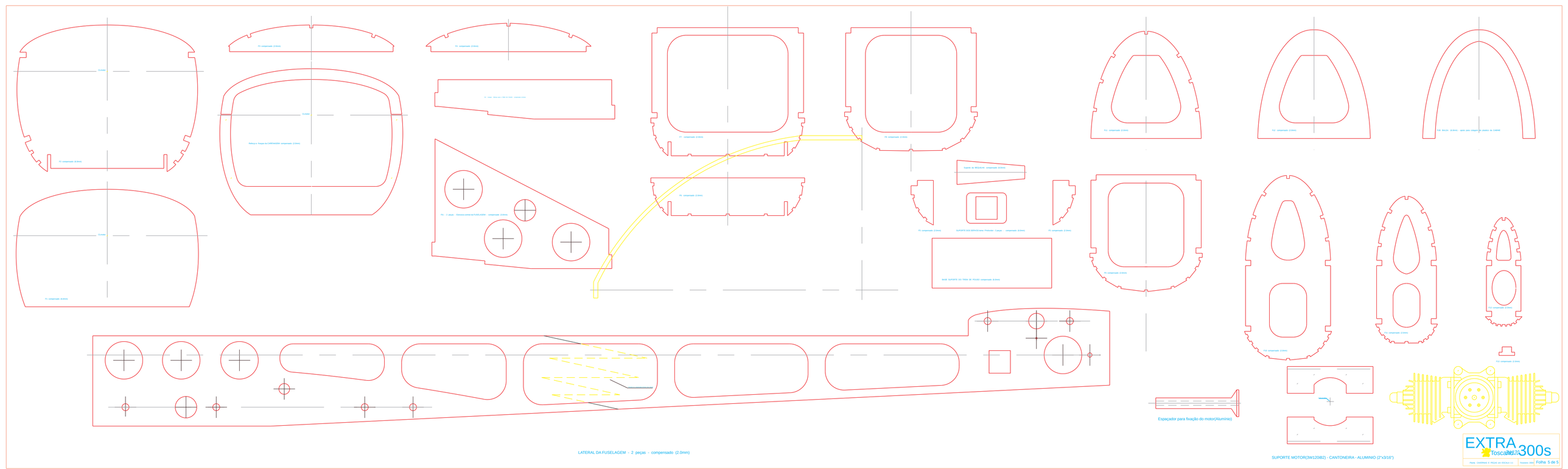Plano EXTRA 300s3W