SUNDERLAND II

Restored by "great_plans" BLMCAI 2005

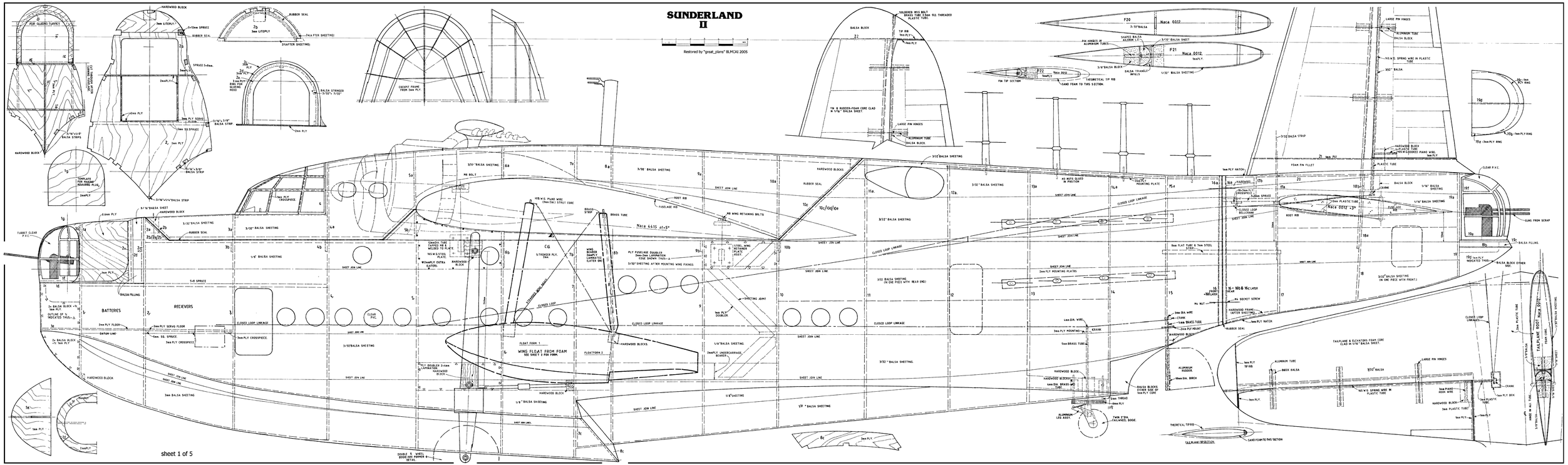
BATTERIES
RECEIVERS
WING FLOAT FROM FOAM
SEE SHEET 2 FOR FORM.
Naca 4415 at+5°
CG
5-STRONGER PLY. 3mm
FLOAT FORM 1
FLOATFORM 2
CLOSED LOOP LINKAGE
SHEET JOIN LINE
3/32"BALSA SHEETING
1/8" BALSA SHEETING
HARDWOOD BLOCKS
RUBBER SEAL
BRASS TUBE
FUSELAGE RIB
ROOT RIB
M8 WING RETAINING BOLTS
M8 NUTS GLUED IN PISTON
STEEL WING LOCKING PLATE ASSY.
PLY FUSELAGE DOUBLER 3mm+2mm LAMINATION EDGE SHOWN THUS:-
3/32"SHEETING AFTER MOUNTING WING FIXINGS
SHEETING JOINT
1mm PLY DOUBLER
1mm PLY MOUNTING PLATE
3mm PLY MOUNTING PLATES
3mm PLY MOUNTING PLATE
5mm BRASS TUBE
6mm DIA. BRASS-WIRE
6mm DIA WIRE
CRANK
6mm BRASS TUBE
3mm PLY MOUNT
ALUMINUM RUDDER
6mm DIA. BIRCH
BALSA BLOCKS EITHER SIDE OF 1mm PLY CORE
ALUMINUM LEG ASSY.
TWIN 2"DIA. FAILWHEEL BOGIE.
3mm THREAD
6mm PLY
1/8"
FAILPLANE & ELEVATORS FOAM CORE CLAD IN 1/16" BALSA SHEET.
FAILPLANE DESECTION.
THEORETICAL TIP RIB
LAND FOAM TO THIS SECTION
F20 Naca 0012
F21 Naca 0012
F22 NACA 0012
3/32"BALSA
3/32" BALSA SHEET
SHARPS BALSA AILERON 1.5"
PIN HINGES IN ALUMINUM TUBES
3/8"BALSA BLOCK
BALSA TRIANGLE INFILLS
1/32" BALSA SHEETING
PIN TIP SECTION
LARGE PIN HINGES
ALUMINUM TUBE
BALSA BLOCK
SOLDERED M13 BOLT BRASS TUBE 12mm O.D. THREADED PLASTIC TUBE.
TIP RIB 1mm PLY
1mm PLY
FIN & RUDDER-FOAM CORE CLAD IN 1/16" BALSA SHEET.
M8 WING RETAINING BOLTS
M8 NUTS GLUED IN PISTON
1mm PLY MOUNTING PLATE
1mm PLY MOUNTING PLATES
1mm PLY MOUNT
1mm PLY BATCH
M4 SOCKET SCREW
M4 NUT
HARDWOOD FRAME (AFTER SHEETING)
RUBBER SEAL
ALUMINUM TUBE
BOCK BALSA
1mm PLY TIP RIB
1mm PLY
3/32" BALSA
NS W.S. SPRING WIRE IN PLASTIC TUBE
3mm PIANO HOOK WIRE
HARDWOOD BLOCK
3mm PLASTIC TUBE
1mm PLY BOX
CRANK
1mm PLY
1mm PLY-
1mm PLY-
1mm PLY-

SUNDERLAND II

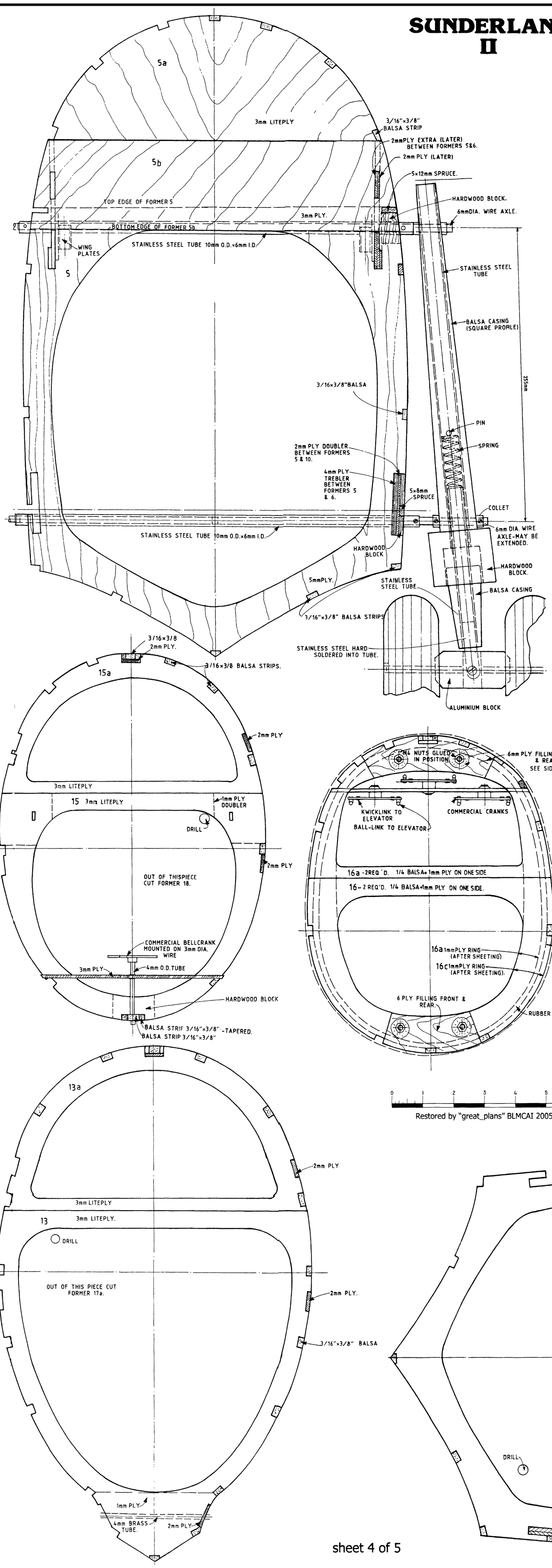

Restored by "great_plans" BLMCAI 2005

SUNDERLAND II

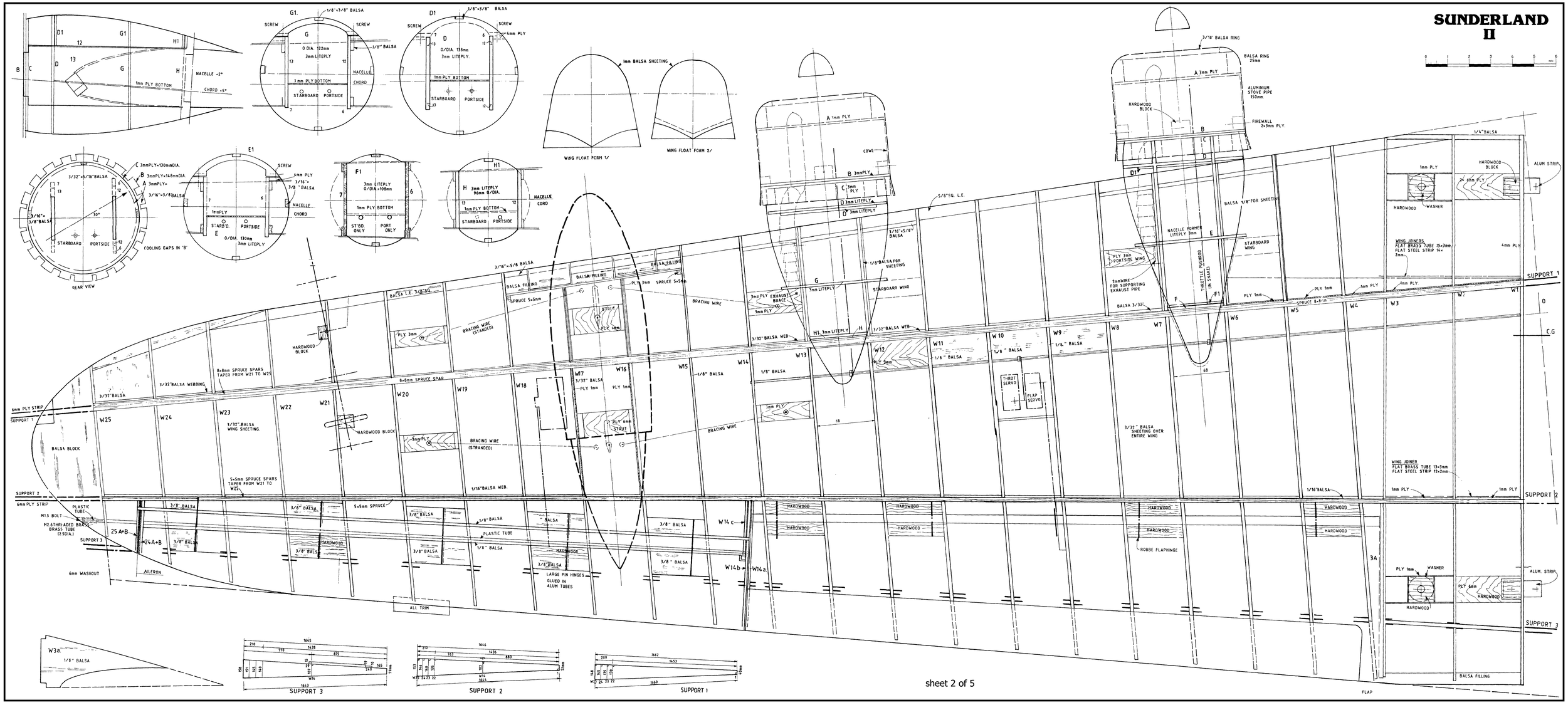

sheet 2 of 5

SUNDERLAND II

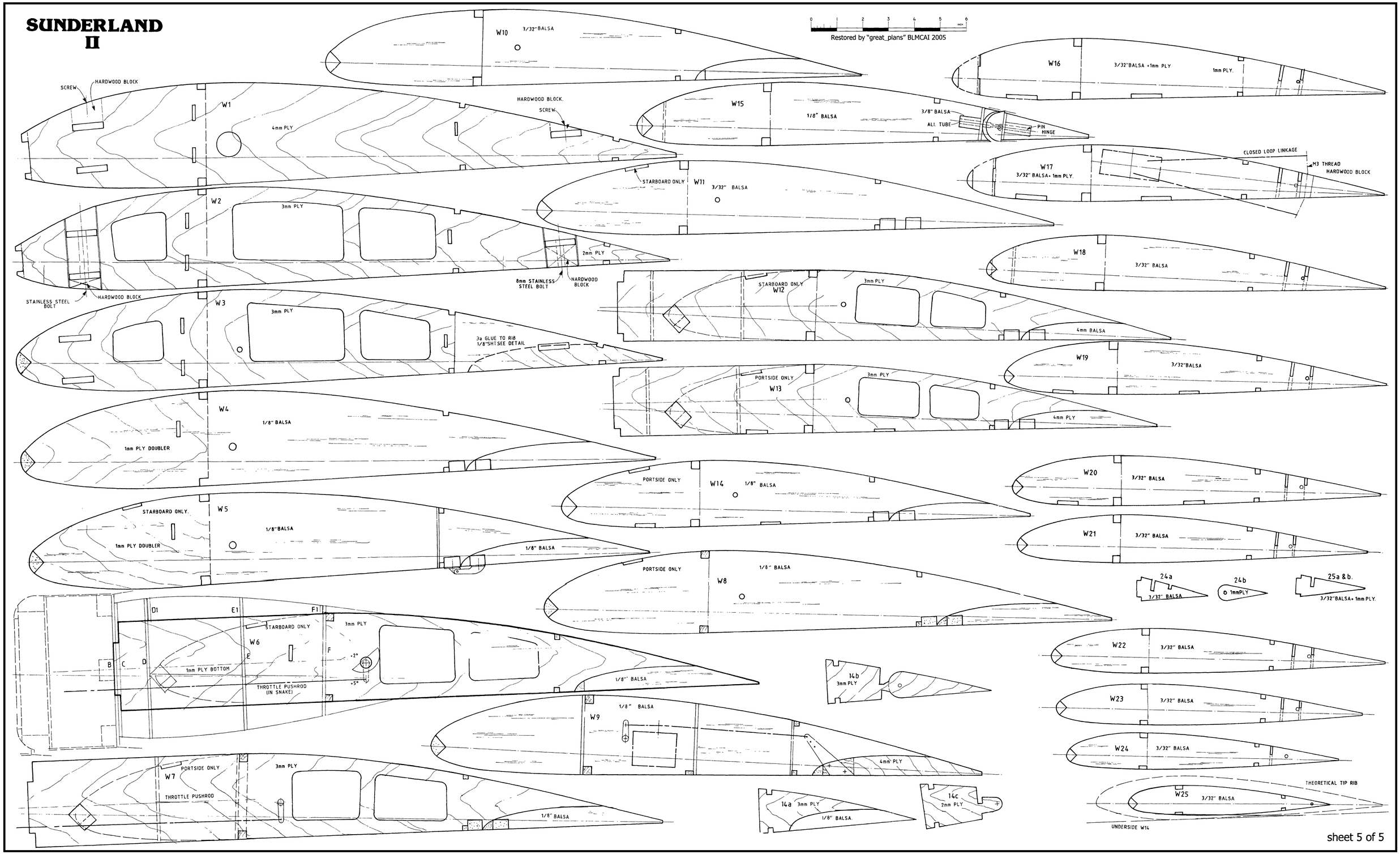

sheet 5 of 5

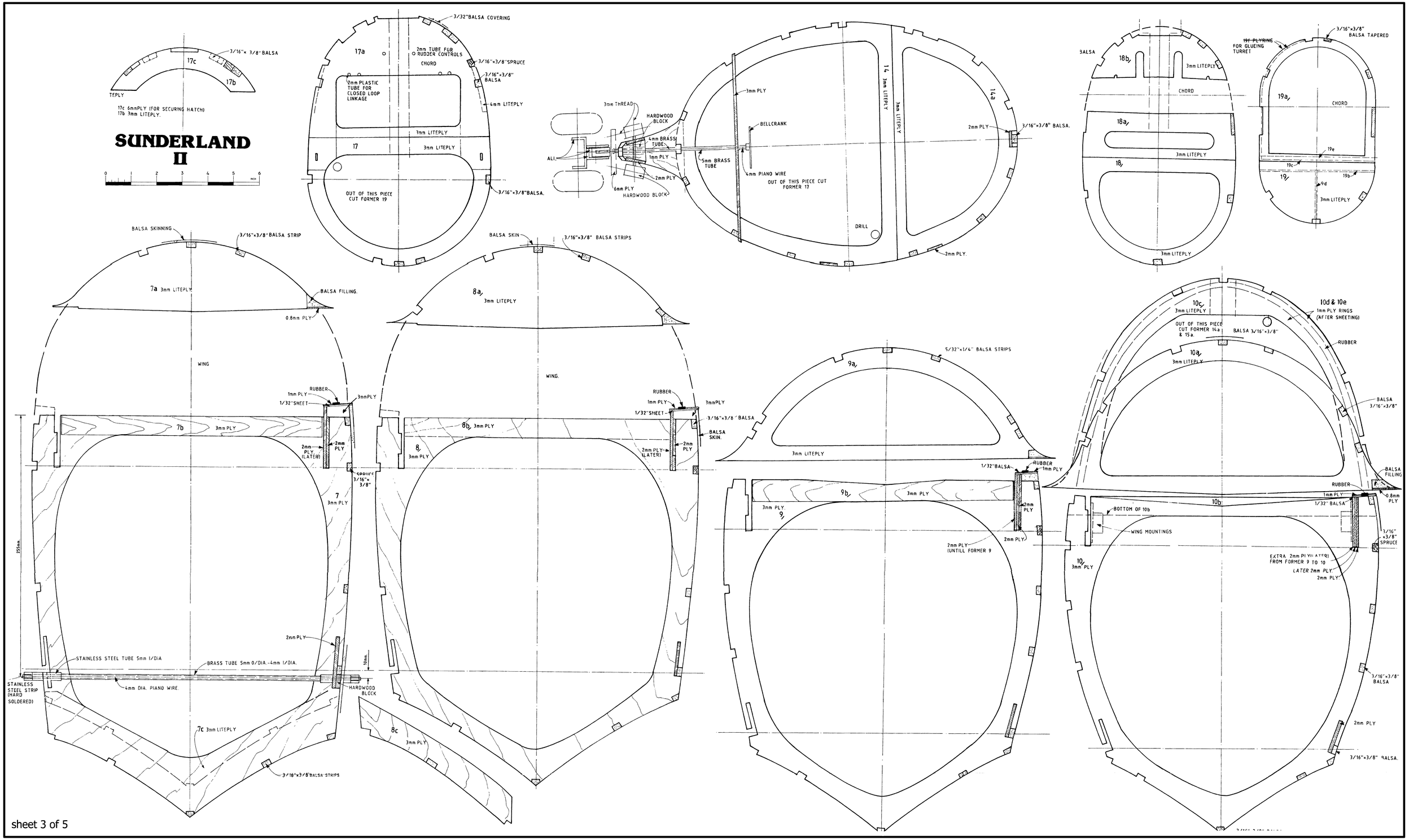
SUNDERLAND
II
17c 6mmPLY (FOR SECURING HATCH)
17b 3mm LITEPLY.
3/16"× 3/8" BALSA
17c
17b
TEPLY
17a
3/32"BALSA COVERING
2mm TUBE FOR RUDDER CONTROLS
CHORD
3/16"×3/8"SPRUCE
3/16"×3/8" BALSA
2mm PLASTIC TUBE FOR CLOSED LOOP LINKAGE
4mm LITEPLY
3mm LITEPLY
17
3mm LITEPLY
OUT OF THIS PIECE CUT FORMER 19
3/16"×3/8"BALSA.
3mm THREAD
HARDWOOD BLOCK
4mm BRASS TUBE
ALL.
1mm PLY
2mm PLY
6mm PLY
HARDWOOD BLOCK
3mm PLY
BELLCRANK
5mm BRASS TUBE
4mm PIANO WIRE
OUT OF THIS PIECE CUT FORMER 17
14
3mm LITEPLY
3mm LITEPLY
14a
2mm PLY
3/16"×3/8" BALSA.
DRILL
2mm PLY.
3BALSA
18b
3mm LITEPLY
CHORD
18a
3mm LITEPLY
18
3mm LITEPLY
~~19f PLYRING~~
FOR GLUEING TURRET
3/16"×3/8" BALSA TAPERED
19a
CHORD
19e
19c
19b
19
9d
3mm LITEPLY
BALSA SKINNING
3/16"×3/8" BALSA STRIP
7a 3mm LITEPLY
BALSA FILLING.
0.8mm PLY
WING
RUBBER
1mm PLY
1/32"SHEET
3mmPLY
7b
3mm PLY
2mm PLY
2mm PLY (LATER)
COPHIRE 3/16"× 3/8"
7
3mm PLY
255mm.
2mm PLY
STAINLESS STEEL TUBE 5mm I/DIA
BRASS TUBE 5mm O/DIA.-4mm I/DIA.
16mm.
STAINLESS STEEL STRIP (HARD SOLDERED)
4mm DIA. PIANO WIRE.
HARDWOOD BLOCK
7c 3mm LITEPLY
3/16"×3/8" BALSA STRIPS
BALSA SKIN
3/16"×3/8" BALSA STRIPS
8a
3mm LITEPLY
WING.
RUBBER
1mm PLY
1/32"SHEET
3mmPLY
3/16"×3/8" BALSA
BALSA SKIN.
8b 3mm PLY
2mm PLY
2mm PLY (LATER)
8
3mm PLY
8c
3mm PLY
5/32"×1/4" BALSA STRIPS
9a
3mm LITEPLY
1/32"BALSA
RUBBER
1mm PLY
9b
3mm PLY
3mm PLY
9
2mm PLY
2mm PLY
2mm PLY (UNTILL FORMER 9
10c
3mm LITEPLY
OUT OF THIS PIECE CUT FORMER 14a & 15a.
BALSA 3/16"×3/8"
10d & 10e
1mm PLY RINGS (AFTER SHEETING)
RUBBER
10a
3mm LITEPLY
BALSA 3/16"×3/8"
BALSA FILLING
RUBBER
1mm PLY
0.8mm PLY
10b
1/32" BALSA
BOTTOM OF 10b
WING MOUNTINGS
3/16" ×3/8" SPRUCE
EXTRA 2mm PLY (LATER) FROM FORMER 9 TO 10
LATER 2mm PLY
2mm PLY
10
3mm PLY
3/16"×3/8" BALSA
2mm PLY
3/16"×3/8" BALSA.

sheet 3 of 5