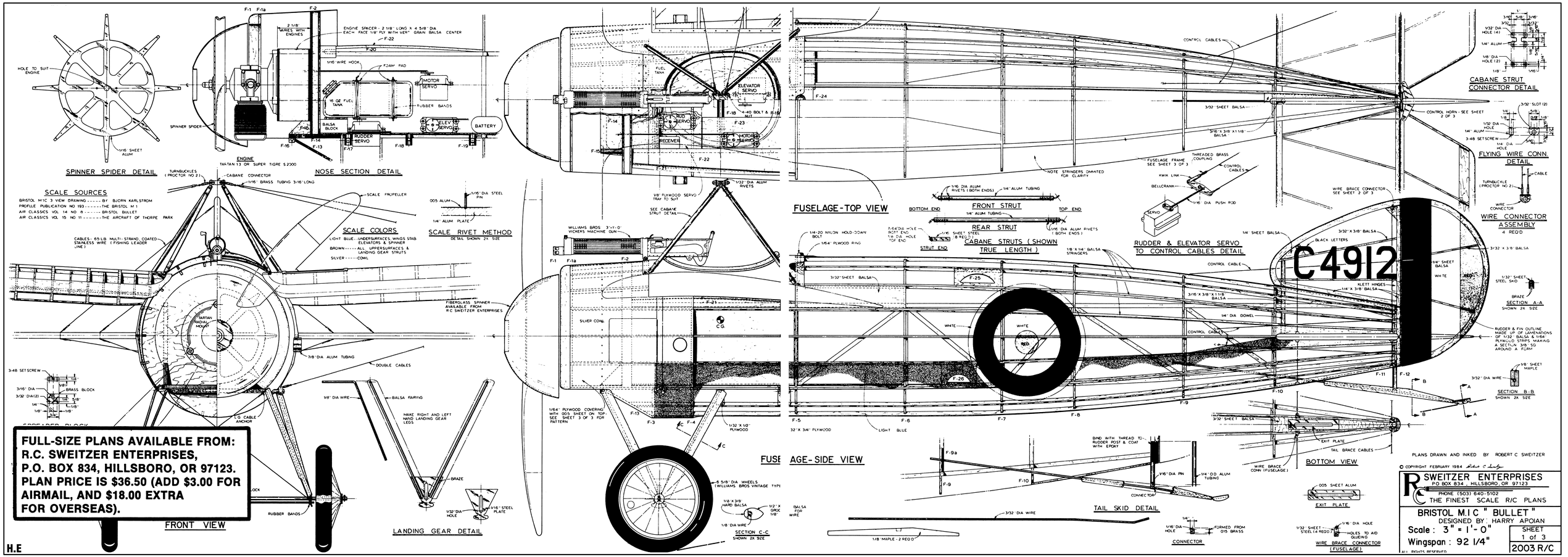
SPINNER SPIDER DETAIL
NOSE SECTION DETAIL
ENGINE
TARTAN 13 OR SUPER TIGRE S 2300
ENGINE SPACER - 2 1/8" LONG X 4 5/8" DIA. EACH FACE 1/8" PLY WITH VERT GRAIN BALSA CENTER
2 1/8" WASHERS WITH ENGINES
1/16" WIRE HOOK
FOAM PAD
MOTOR SERVO
16 OZ FUEL TANK
RUBBER BANDS
BALSA BLOCK
RUDDER SERVO
ELEV SERVO
BATTERY
SPINNER SPIDER
HOLE TO SUIT ENGINE
1/16" SHEET ALUM
SCALE SOURCES
BRISTOL M1C 3 VIEW DRAWING ------ BY BJORN KARLSTROM
PROFILE PUBLICATION NO 193 ------ THE BRISTOL M 1
AIR CLASSICS VOL 14 NO 8 ------ BRISTOL BULLET
AIR CLASSICS VOL 15 NO 11 ------ THE AIRCRAFT OF THORPE PARK
SCALE COLORS
LIGHT BLUE...UNDERSURFACES, WINGS STAB ELEVATORS & SPINNER
BROWN ------ ALL UPPERSURFACES & LANDING GEAR STRUTS
SILVER ------ COWL
SCALE RIVET METHOD
DETAIL SHOWN 2X SIZE
.005 ALUM
1/16" DIA STEEL PIN
1/4" ALUM PLATE
TURNBUCKLES (PROCTOR NO 2)
CABANE CONNECTOR
1/16" BRASS TUBING 3-16" LONG
SCALE PROPELLER
CABLES - 65 LB MULTI-STRAND COATED STAINLESS WIRE (FISHING LEADER LINE)
MARTIN RADIAL MOUNT
FIBERGLASS SPINNER AVAILABLE FROM R C SWEITZER ENTERPRISES
7/8" DIA ALUM TUBING
DOUBLE CABLES
3-48 SET SCREW
3/16" DIA
3/32" DIA (2)
BRASS BLOCK
1/4"
1/8"
5/8"
1/8"
1/4"
SPREADER BLOCK
C.G. CABLE ANCHOR
1/8" DIA WIRE
BALSA FAIRING
MAKE RIGHT AND LEFT HAND LANDING GEAR LEGS
BRAZE
1/32" DIA HOLE
1/16" STEEL PLATE
LANDING GEAR DETAIL
RUBBER BANDS
FRONT VIEW
FULL-SIZE PLANS AVAILABLE FROM:
R.C. SWEITZER ENTERPRISES,
P.O. BOX 834, HILLSBORO, OR 97123.
PLAN PRICE IS $36.50 (ADD $3.00 FOR AIRMAIL, AND $18.00 EXTRA FOR OVERSEAS).
H.E
FUEL TANK
ELEVATOR SERVO
4-40 BOLT & NUT
RUD SERVO
RECEIVER
MOTOR SERVO
1/32" DIA ALUM RIVETS
1/8" PLYWOOD SERVO TRAY TO SUIT
SEE CABANE STRUT DETAIL
WILLIAMS BROS 3"+1-0" VICKERS MACHINE GUN
SILVER COWL
C.G.
1/64" PLYWOOD COVERING WITH .005 SHEET ON TOP. SEE SHEET 3 OF 3 FOR PATTERN
1/32" X 1/2" PLYWOOD
6 5/8" DIA WHEELS (WILLIAMS BROS VINTAGE TYPE)
1/8" X 3/8" HARD BALSA
1/2" X GROC 1/8"
BALSA FOR WIRE
1/8" DIA WIRE
SECTION C-C
SHOWN 2X SIZE
FUSELAGE-SIDE VIEW
CONTROL CABLES
3/32" SHEET BALSA
3/16" X 3/8" X 1 1/8" BALSA
NOTE STRINGERS OMMITED FOR CLARITY
FUSELAGE-TOP VIEW
1/16" DIA ALUM RIVETS (BOTH ENDS)
1/4" ALUM TUBING
FRONT STRUT
BOTTOM END
TOP END
REAR STRUT
7/64" DIA HOLE - BOTT END 1/8" DIA HOLE TOP END
1/16" SHEET STEEL 8 REQ'D
STRUT END
1/16" DIA ALUM RIVETS (BOTH ENDS)
CABANE STRUTS (SHOWN TRUE LENGTH)
1/4-20 NYLON HOLD-DOWN BOLT
1/64" PLYWOOD RING
1/8" X 1/4" BALSA STRINGERS
FUSELAGE FRAME SEE SHEET 3 OF 3
THREADED BRASS COUPLING
CONTROL CABLES
KWIK LINK
BELLCRANK
SERVO
1/16" DIA PUSH ROD
RUDDER & ELEVATOR SERVO TO CONTROL CABLES DETAIL
CONTROL HORN - SEE SHEET 2 OF 3
WIRE BRACE CONNECTOR SEE SHEET 3 OF 3
1/4" SHEET BALSA
3/32" X 3/8" BALSA
BLACK LETTERS
3/32" X 3/8" BALSA
C4912
1/4" SHEET BALSA
WHITE
RED
CONTROL CABLE
ALETT HINGES
1/4" X 3/8" BALSA
1/4" DIA DOWEL
CONTROL CABLE
WHITE
RED
F-25
F-26
F-5
F-6
F-7
F-8
F-9
F-10
F-11
F-12
32" X 3/4" PLYWOOD
LIGHT BLUE
RUDDER & FIN OUTLINE MADE UP OF DIMENSIONS OF 1/32" BALSA & 1/64" PLYWOOD STRIPS MAKING A SECTION 3/8" SQ AROUND A FORM
CABANE STRUT CONNECTOR DETAIL
1/32" DIA HOLE (4)
1/4" ALUM
1/8" DIA HOLE (2)
3/32" SLOT (2)
1/32" DIA HOLE
1/4" ALUM
3-48 SET SCREW
1/4" DIA HOLE
FLYING WIRE CONN. DETAIL
CABLE
TURNBUCKLE (PROCTOR NO 2)
WIRE CONNECTOR
WIRE CONNECTOR ASSEMBLY
4 REQ'D
1/32" SHEET STEEL SKID
BRAZE
SECTION A-A
SHOWN 2X SIZE
1/8" SHEET MAPLE
3/32" DIA WIRE
SECTION B-B
SHOWN 2X SIZE
BIND WITH THREAD TO RUDDER POST & COAT WITH EPOXY
F-9a
F-9
F-10
1/16" DIA PIN
1/4" O.D. ALUM TUBING
CONNECTOR
TAIL SKID DETAIL
3/32" DIA WIRE
1/8" MAPLE - 2 REQ'D
1/16" DIA HOLE
1/4"
FORMED FROM .015 BRASS
CONNECTOR
3/32" SHEET BALSA
EXIT PLATE
TAIL BRACE CABLES
WIRE BRACE CONN (FUSELAGE)
BOTTOM VIEW
.005 SHEET ALUM
EXIT PLATE
1/32" SHEET STEEL (4 REQ'D)
1/16" DIA HOLE
HOLES TO AID GLUEING
WIRE BRACE CONNECTOR (FUSELAGE)
PLANS DRAWN AND INKED BY ROBERT C SWEITZER
© COPYRIGHT FEBRUARY 1984
SWEITZER ENTERPRISES
PO BOX 834, HILLSBORO, OR 97123
PHONE (503) 640-5102
THE FINEST SCALE R/C PLANS
BRISTOL M.I C "BULLET"
DESIGNED BY HARRY APOIAN
Scale : 3" = 1'-0"
Wingspan : 92 1/4"
SHEET 1 of 3
2003 R/C
ALL RIGHTS RESERVED

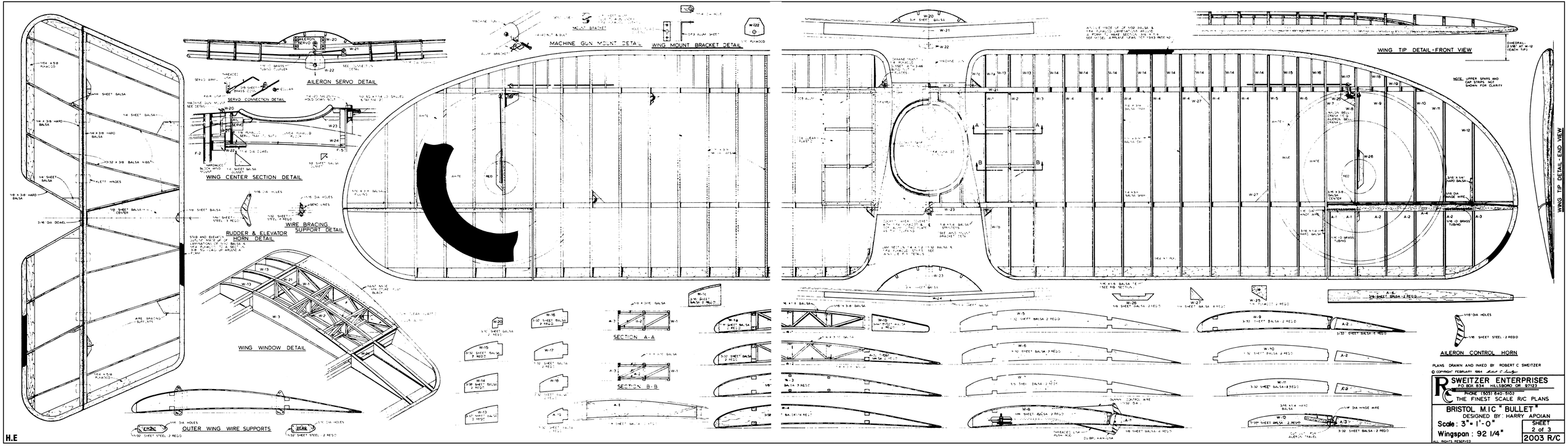
AILERON SERVO DETAIL
SERVO CONNECTION DETAIL
WING CENTER SECTION DETAIL
RUDDER & ELEVATOR HORN DETAIL
WIRE BRACING SUPPORT DETAIL
WING WINDOW DETAIL
OUTER WING WIRE SUPPORTS
MACHINE GUN MOUNT DETAIL
WING MOUNT BRACKET DETAIL
SECTION A-A
SECTION B-B
WING TIP DETAIL - FRONT VIEW
WING TIP DETAIL - END VIEW
AILERON CONTROL HORN
PLANS DRAWN AND INKED BY ROBERT C SWEITZER
© COPYRIGHT FEBRUARY 1996
SWEITZER ENTERPRISES
P.O. BOX 834 HILLSBORO OR 97123
PHONE (503) 640-5102
THE FINEST SCALE R/C PLANS
BRISTOL M.I.C "BULLET"
DESIGNED BY: HARRY APOIAN
Scale: 3" = 1'-0"
Wingspan: 92 1/4"
SHEET 2 of 3
2003 R/C
ALL RIGHTS RESERVED
H.E

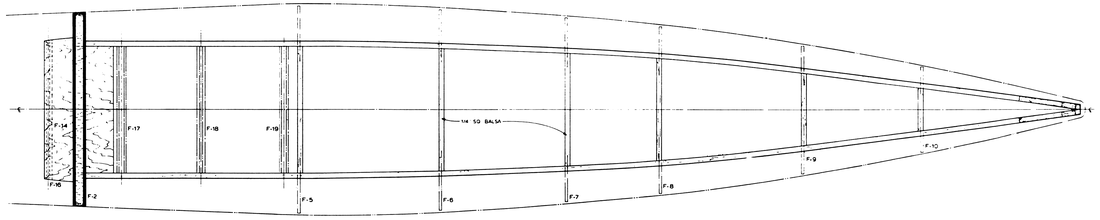

FUSELAGE FRAME - PLAN VIEW

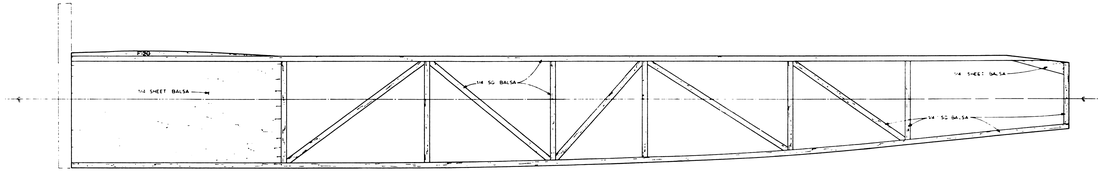

FUSELAGE FRAME - SIDE VIEW (SHOWN TRUE LENGTH)

2 REQ'D.

FULL-SIZE PLANS AVAILABLE FROM:
R.C. SWEITZER ENTERPRISES,
P.O. BOX 834, HILLSBORO, OR 97123.
PLAN PRICE IS $36.50 (ADD $3.00 FOR AIRMAIL, AND $18.00 EXTRA FOR OVERSEAS).

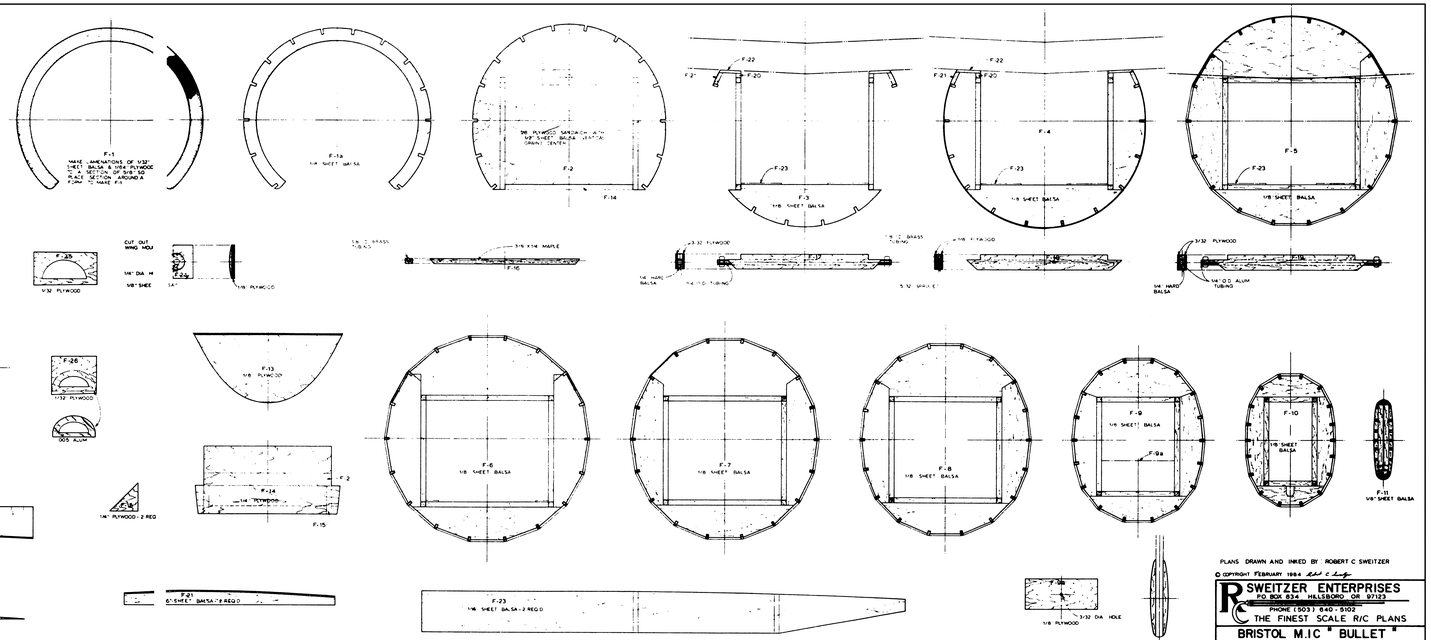

PLANS DRAWN AND INKED BY ROBERT C SWEITZER

© COPYRIGHT FEBRUARY 1984 Robert C Sweitzer

SWEITZER ENTERPRISES
P.O. BOX 834 HILLSBORO, OR 97123
PHONE (503) 640-5102

THE FINEST SCALE R/C PLANS

BRISTOL M.I.C "BULLET"
DESIGNED BY: HARRY APOIAN

Scale: 3" = 1'-0"
Wingspan: 92 1/4"

SHEET 3 of 3

2003 R/C

ALL RIGHTS RESERVED

H.E