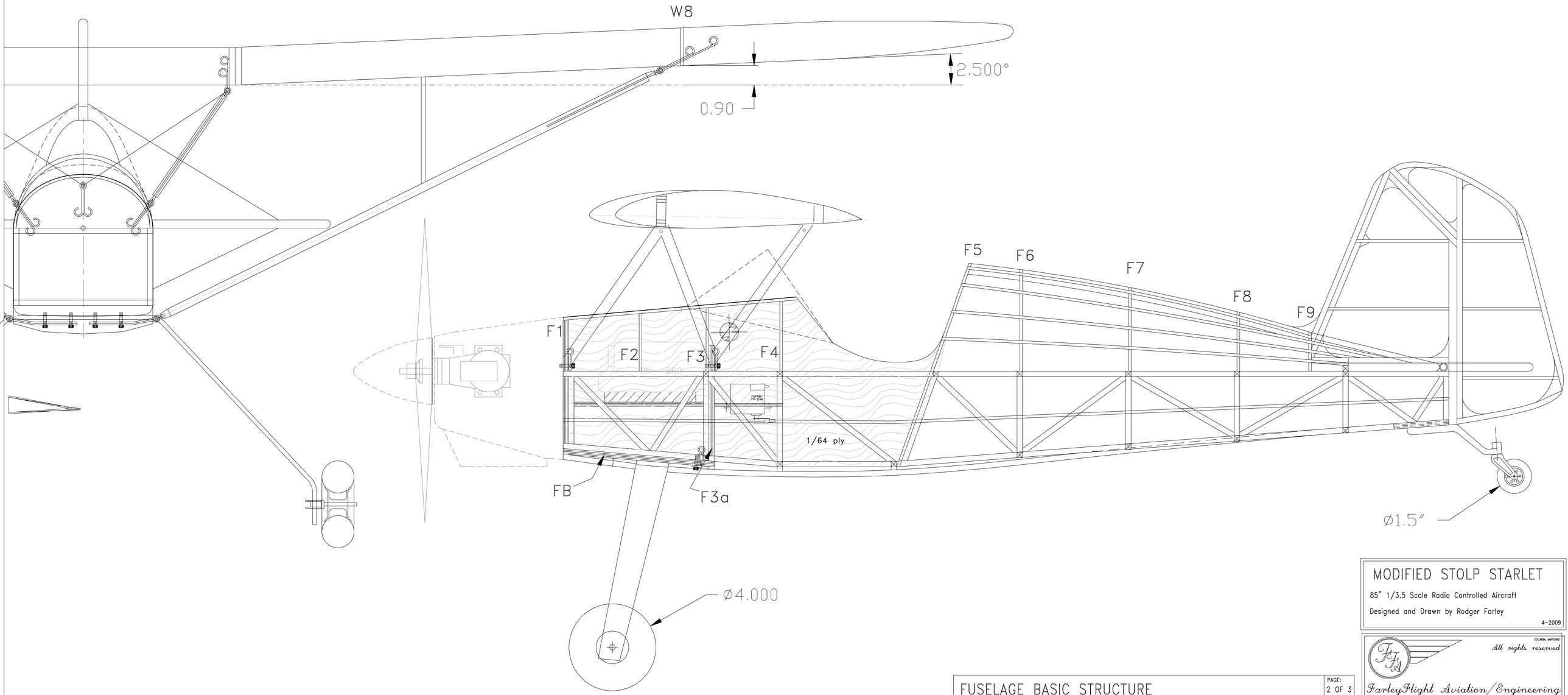

MODIFIED STOLP STARLET

85" 1/3.5 Scale Radio Controlled Aircraft

Designed and Drawn by Rodger Farley

4-2009

All rights reserved

COLUMBIA, MARYLAND

Farley Flight Aviation/Engineering

FUSELAGE BASIC STRUCTURE