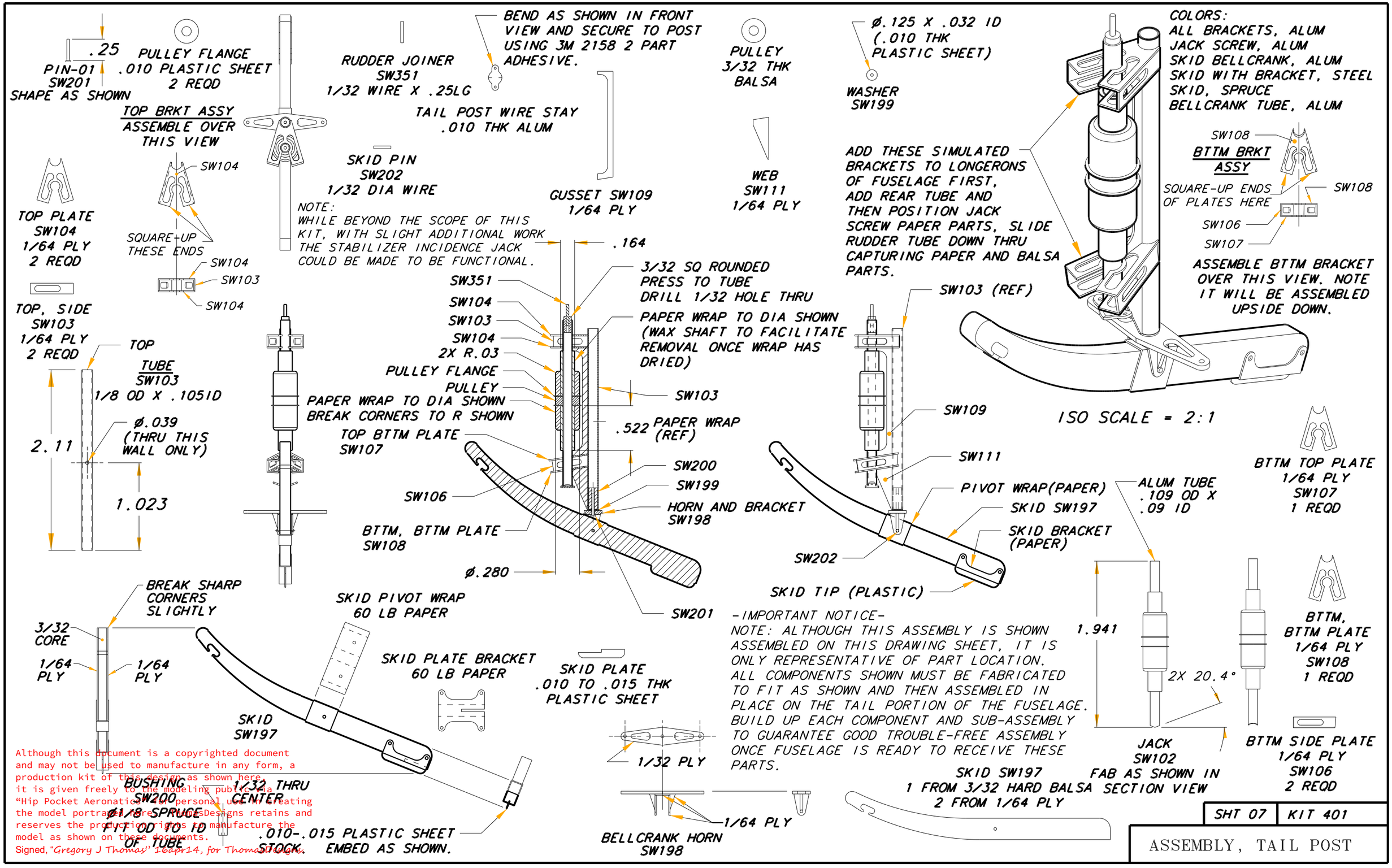

-IMPORTANT NOTICE-
NOTE: ALTHOUGH THIS ASSEMBLY IS SHOWN ASSEMBLED ON THIS DRAWING SHEET, IT IS ONLY REPRESENTATIVE OF PART LOCATION. ALL COMPONENTS SHOWN MUST BE FABRICATED TO FIT AS SHOWN AND THEN ASSEMBLED IN PLACE ON THE TAIL PORTION OF THE FUSELAGE. BUILD UP EACH COMPONENT AND SUB-ASSEMBLY TO GUARANTEE GOOD TROUBLE-FREE ASSEMBLY ONCE FUSELAGE IS READY TO RECEIVE THESE PARTS.

Although this document is a copyrighted document and may not be used to manufacture in any form, a production kit of this design as shown here, it is given freely to the modeling public via a "Hip Pocket Aeronautics" personal use. In creating the model portrayed here, Thomas Designs retains and reserves the production rights to manufacture the model as shown on these documents.
Signed, "Gregory J Thomas" 16apr14, for Thomas Designs.

SHT 07	KIT 401

ASSEMBLY, TAIL POST