Although this document is a copyrighted document
and may not be used to manufacture in any form, a
production kit of this design as shown here,
it is given freely to the modeling public via
"Hip Pocket Aeronatics" for personal use in creating
the model portrayed here. ThomasDesigns retains and
reserves the production rights to manufacture the
model as shown on these documents.
Signed, "Gregory J Thomas" 16apr14, for ThomasDesigns

FRONT

DEVELOPED TOP SHEETING
MAKE FROM 1/16 BALSA SHEET
MATERIAL NOT SUPPLIED

AFTER COMPLETING THE BASE OF THE BASE OF THE WING TIP FORMING FIXTURE PIN THE TIP FORMING TEMPLATE TO THE BASE USING THE LINE-UP HOLES AS A GUIDE TO ESTABLISH POSITIONS OF EACH PART.

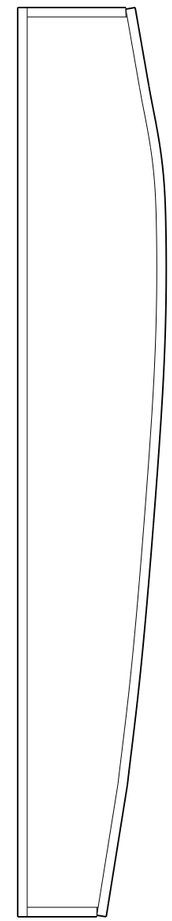

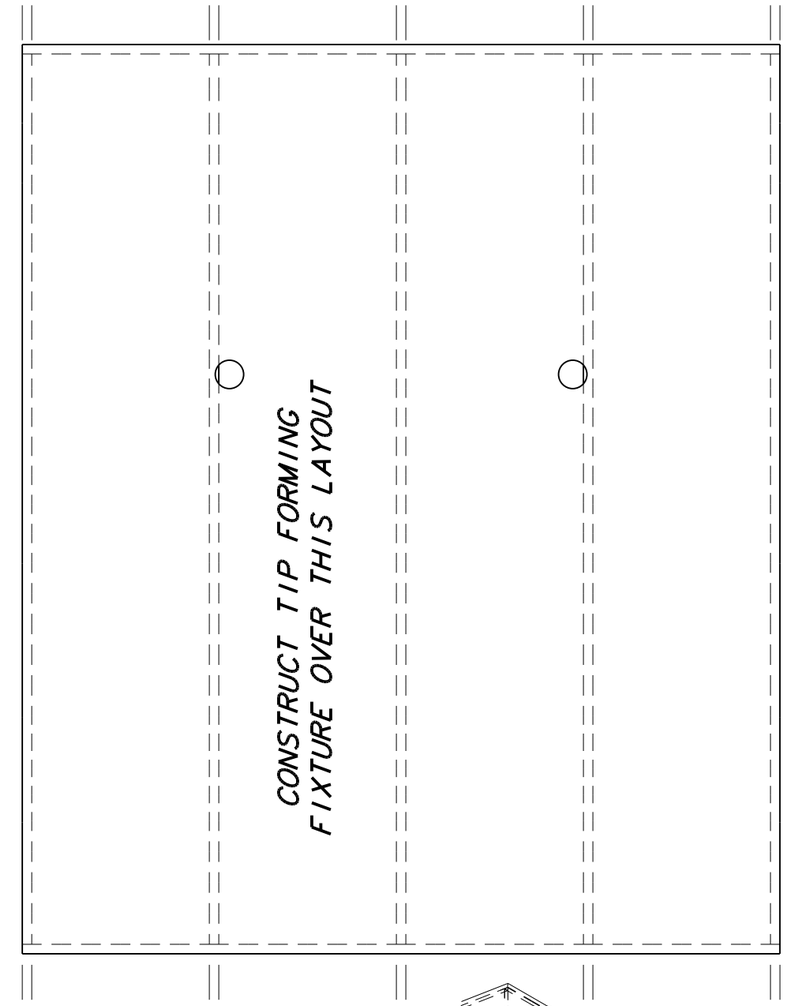

GRAIN

BACK PLATE - 1/16 SHEET - 1 REQD
MATERIAL NOT SUPPLIED

FRONT

DEVELOPED TIP FORM SHEETING
MAKE FROM 3/32 BALSA SHEET
MATERIAL NOT SUPPLIED

GRAIN

WAX EDGES BEFORE
LAMINATING STRIP STOCK

GRAIN

FRONT PLATE - 1/16 SHEET - 1 REQD
MATERIAL NOT SUPPLIED

GRAIN

FIXTURE FORMING RIB - 5 REQD
MAKE FROM 1/16 BALSA SHEET
MATERIAL NOT SUPPLIED

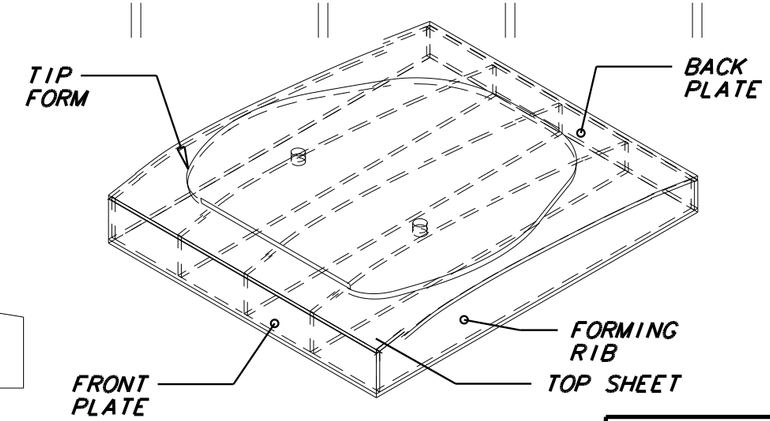

KIT NUMBER 401

THOMAS DESIGNS
505 WILDFLOWER, BURNSVILLE MN 55306
COPYRIGHTED MATERIAL

WING TIP FIXTURE,
SOPWITH TRIPLANE