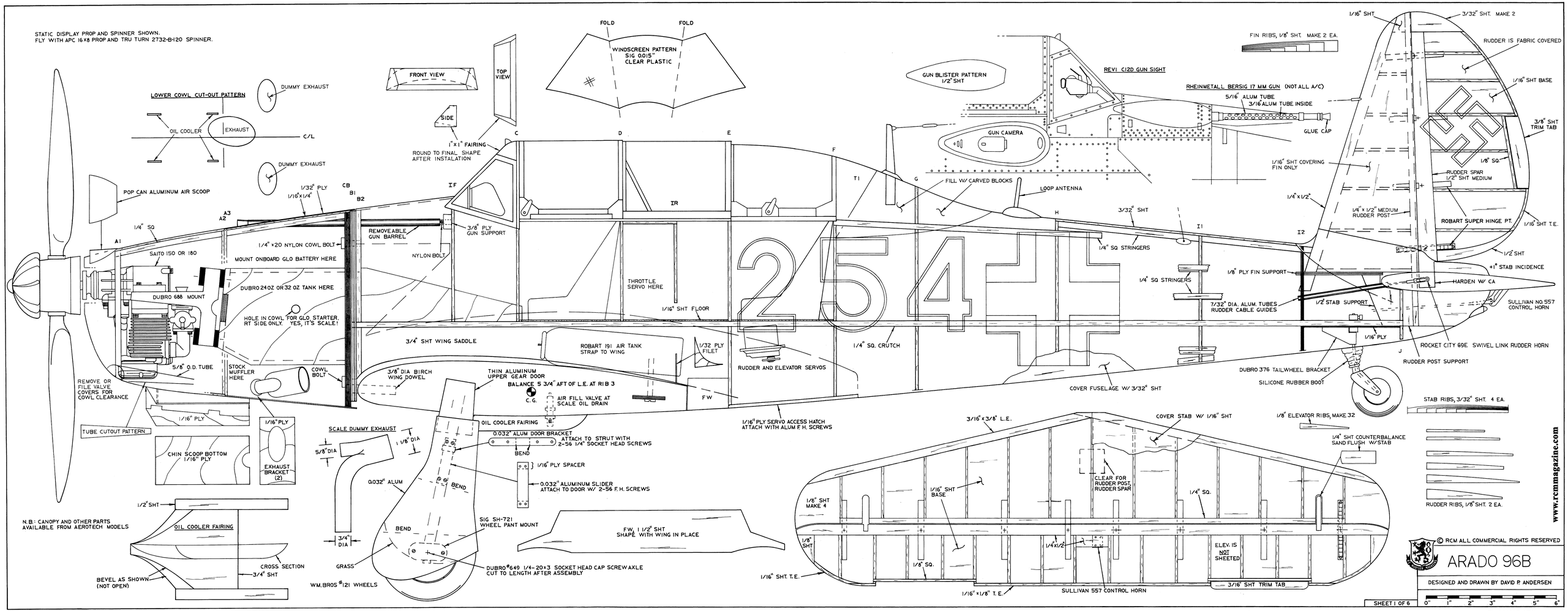
STATIC DISPLAY PROP AND SPINNER SHOWN.
FLY WITH APC 16x8 PROP AND TRU TURN 2732-B-120 SPINNER.
LOWER COWL CUT-OUT PATTERN
DUMMY EXHAUST
OIL COOLER
EXHAUST
C/L
DUMMY EXHAUST
FRONT VIEW
SIDE
TOP VIEW
WINDSCREEN PATTERN
SIG 0.015"
CLEAR PLASTIC
FOLD
FOLD
1"x1" FAIRING
ROUND TO FINAL SHAPE
AFTER INSTALATION
POP CAN ALUMINUM AIR SCOOP
1/32" PLY
1/16"x1/4"
CB
B1
B2
IF
C
D
E
F
IR
T1
G
H
I1
I2
J
A1
A2
A3
1/4" SQ
SAITO 150 OR 180
1/4" x 20 NYLON COWL BOLT
MOUNT ONBOARD GLO BATTERY HERE
REMOVEABLE
GUN BARREL
3/8" PLY
GUN SUPPORT
NYLON BOLT
DUBRO 688 MOUNT
DUBRO 24 OZ OR 32 OZ TANK HERE
HOLE IN COWL FOR GLO STARTER.
RT SIDE ONLY. YES, IT'S SCALE!
THROTTLE
SERVO HERE
1/16" SHT FLOOR
3/4" SHT WING SADDLE
ROBART 191 AIR TANK
STRAP TO WING
1/32 PLY
FILET
1/4" SQ. CRUTCH
RUDDER AND ELEVATOR SERVOS
FILL W/ CARVED BLOCKS
LOOP ANTENNA
GUN BLISTER PATTERN
1/2" SHT
GUN CAMERA
REVI C12D GUN SIGHT
RHEINMETALL BERSIG 17 MM GUN (NOT ALL A/C)
5/16" ALUM TUBE
3/16" ALUM TUBE INSIDE
GLUE CAP
1/16" SHT COVERING
FIN ONLY
3/32" SHT
1/4" SQ STRINGERS
1/4" SQ STRINGERS
1/8" PLY FIN SUPPORT
7/32" DIA. ALUM. TUBES
RUDDER CABLE GUIDES
1/2" STAB SUPPORT
1/16" PLY
DUBRO 376 TAILWHEEL BRACKET
SILICONE RUBBER BOOT
COVER FUSELAGE W/ 3/32" SHT
1/16" PLY SERVO ACCESS HATCH
ATTACH WITH ALUM F.H. SCREWS
FW
REMOVE OR
FILE VALVE
COVERS FOR
COWL CLEARANCE
5/8" O.D. TUBE
STOCK
MUFFLER
HERE
COWL
BOLT
1/16" PLY
TUBE CUTOUT PATTERN
1/16" PLY
CHIN SCOOP BOTTOM
1/16" PLY
EXHAUST
BRACKET
(2)
3/8" DIA BIRCH
WING DOWEL
THIN ALUMINUM
UPPER GEAR DOOR
BALANCE 5 3/4" AFT OF L.E. AT RIB 3
C.G.
AIR FILL VALVE AT
SCALE OIL DRAIN
OIL COOLER FAIRING
0.032" ALUM DOOR BRACKET
ATTACH TO STRUT WITH
2-56 1/4" SOCKET HEAD SCREWS
BEND
1/16" PLY SPACER
0.032" ALUMINUM SLIDER
ATTACH TO DOOR W/ 2-56 F.H. SCREWS
SCALE DUMMY EXHAUST
5/8" DIA
1 1/8" DIA
0.032" ALUM
BEND
BEND
SIG SH-721
WHEEL PANT MOUNT
3/4" DIA
GRASS
WM. BROS #121 WHEELS
DUBRO #649 1/4-20x3 SOCKET HEAD CAP SCREW AXLE
CUT TO LENGTH AFTER ASSEMBLY
FW, 1 1/2" SHT
SHAPE WITH WING IN PLACE
1/2" SHT
OIL COOLER FAIRING
CROSS SECTION
3/4" SHT
BEVEL AS SHOWN
(NOT OPEN)
N.B.: CANOPY AND OTHER PARTS
AVAILABLE FROM AEROTECH MODELS
1/16" SHT
3/32" SHT. MAKE 2
FIN RIBS, 1/8" SHT. MAKE 2 EA.
RUDDER IS FABRIC COVERED
1/16" SHT BASE
3/8" SHT
TRIM TAB
1/8" SQ.
RUDDER SPAR
1/2" SHT MEDIUM
1/4" x 1/2"
1/4" x 1/2" MEDIUM
RUDDER POST
ROBART SUPER HINGE PT.
1/16" SHT T.E.
1/2" SHT
+1° STAB INCIDENCE
HARDEN W/ CA
SULLIVAN NO. 557
CONTROL HORN
ROCKET CITY 69E SWIVEL LINK RUDDER HORN
RUDDER POST SUPPORT
STAB RIBS, 3/32" SHT. 4 EA.
1/8" ELEVATOR RIBS, MAKE 32
RUDDER RIBS, 1/8" SHT. 2 EA.
3/16" x 3/8" L.E.
COVER STAB W/ 1/16" SHT
1/4" SHT COUNTERBALANCE
SAND FLUSH W/STAB
CLEAR FOR
RUDDER POST,
RUDDER SPAR
1/4" SQ.
1/8" SHT
MAKE 4
1/16" SHT
BASE
1/8" SHT
1/4x1/2
1/8" SQ.
ELEV. IS
NOT
SHEETED
1/16" SHT. T.E.
1/16" x 1/8" T.E.
SULLIVAN 557 CONTROL HORN
3/16" SHT TRIM TAB
www.rcmmagazine.com
© RCM ALL COMMERCIAL RIGHTS RESERVED
ARADO 96B
DESIGNED AND DRAWN BY DAVID P. ANDERSEN
SHEET 1 OF 6
0" 1" 2" 3" 4" 5" 6"
PLAN NO. 1311

RIGHT WING

ASSEMBLE RIGHT WING INVERTED OVER THIS VIEW

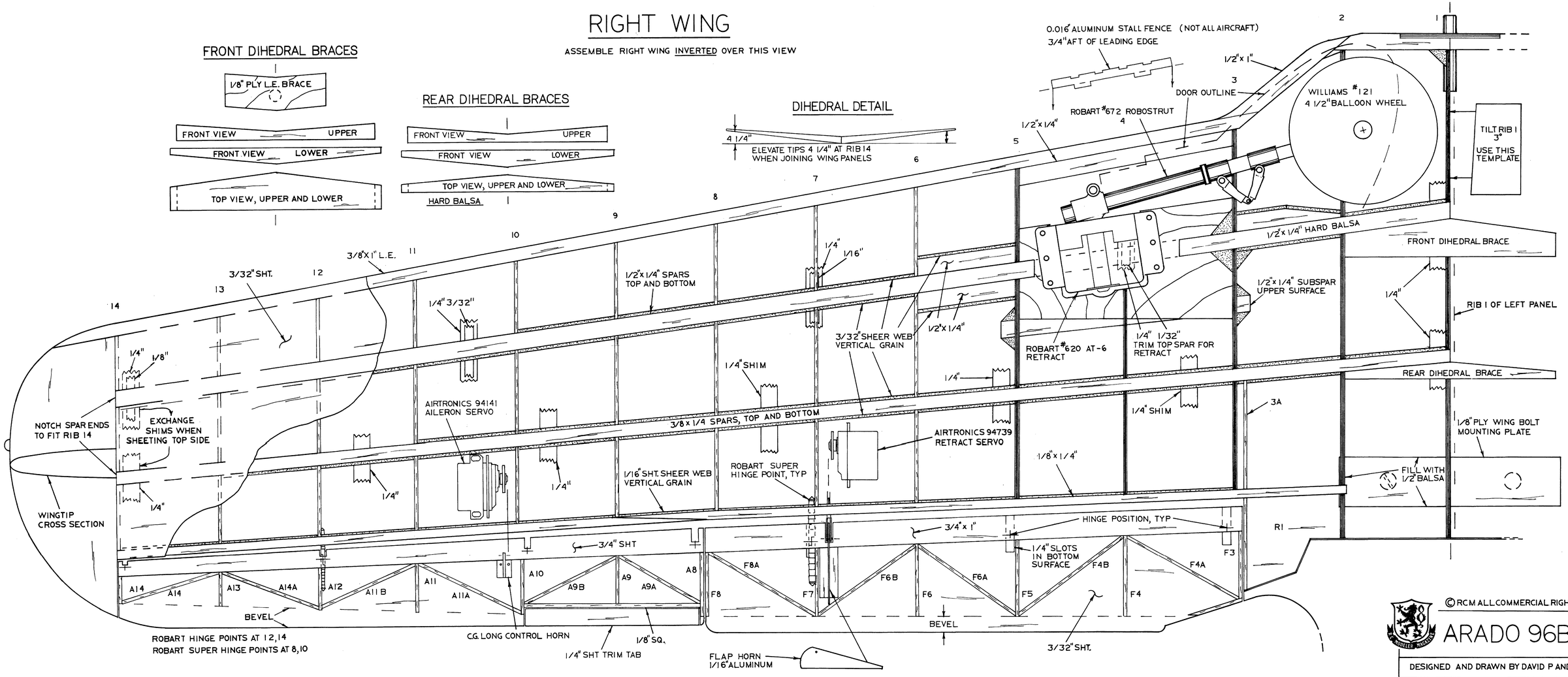

© RCM ALL COMMERCIAL RIGHTS RESERVED

ARADO 96B

DESIGNED AND DRAWN BY DAVID P ANDERSEN

0" 1" 2" 3" 4" 5" 6"

SHEET 2 OF 6

PLAN NO. 1311

www.rcmmagazine.com

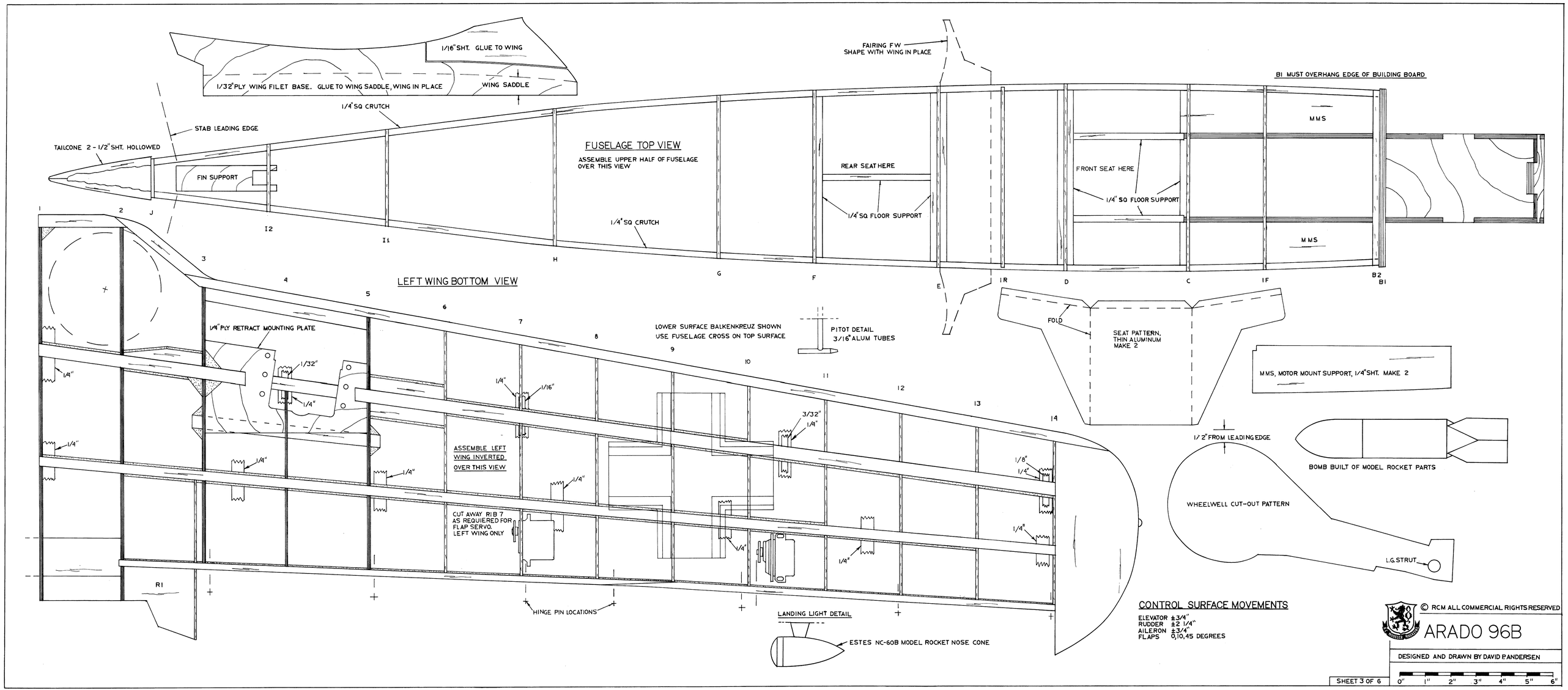
1/16" SHT. GLUE TO WING
1/32" PLY WING FILET BASE. GLUE TO WING SADDLE, WING IN PLACE
WING SADDLE
1/4" SQ CRUTCH
STAB LEADING EDGE
TAILCONE 2 - 1/2" SHT. HOLLOWED
FIN SUPPORT
FUSELAGE TOP VIEW
ASSEMBLE UPPER HALF OF FUSELAGE OVER THIS VIEW
FAIRING F W
SHAPE WITH WING IN PLACE
B1 MUST OVERHANG EDGE OF BUILDING BOARD
REAR SEAT HERE
FRONT SEAT HERE
1/4" SQ FLOOR SUPPORT
MMS
LEFT WING BOTTOM VIEW
1/4" PLY RETRACT MOUNTING PLATE
LOWER SURFACE BALKENKREUZ SHOWN
USE FUSELAGE CROSS ON TOP SURFACE
PITOT DETAIL
3/16" ALUM TUBES
FOLD
SEAT PATTERN, THIN ALUMINUM MAKE 2
MMS, MOTOR MOUNT SUPPORT, 1/4" SHT. MAKE 2
ASSEMBLE LEFT WING INVERTED OVER THIS VIEW
CUT AWAY RIB 7 AS REQUIERED FOR FLAP SERVO. LEFT WING ONLY
HINGE PIN LOCATIONS
LANDING LIGHT DETAIL
ESTES NC-60B MODEL ROCKET NOSE CONE
1/2" FROM LEADING EDGE
WHEELWELL CUT-OUT PATTERN
L.G. STRUT
BOMB BUILT OF MODEL ROCKET PARTS
CONTROL SURFACE MOVEMENTS
ELEVATOR ±3/4"
RUDDER ±2 1/4"
AILERON ±3/4"
FLAPS 0,10,45 DEGREES
© RCM ALL COMMERCIAL RIGHTS RESERVED
ARADO 96B
DESIGNED AND DRAWN BY DAVID P. ANDERSEN
SHEET 3 OF 6
0" 1" 2" 3" 4" 5" 6"
PLAN NO. 1311

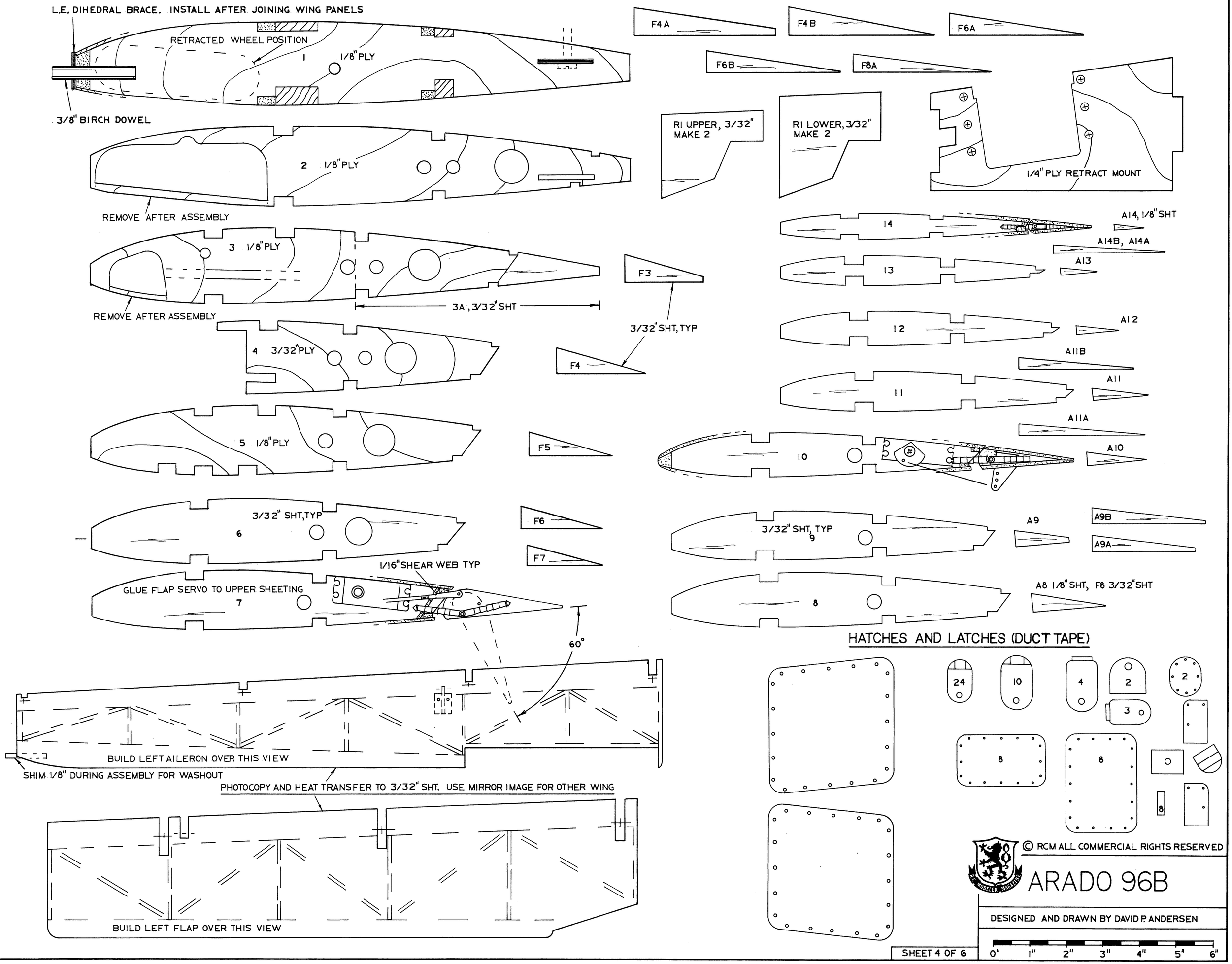
L.E. DIHEDRAL BRACE. INSTALL AFTER JOINING WING PANELS
RETRACTED WHEEL POSITION
1
1/8" PLY
3/8" BIRCH DOWEL
F4 A
F4 B
F6A
F6B
F8A
R1 UPPER, 3/32" MAKE 2
R1 LOWER, 3/32" MAKE 2
1/4" PLY RETRACT MOUNT
2 1/8" PLY
REMOVE AFTER ASSEMBLY
3 1/8" PLY
REMOVE AFTER ASSEMBLY
3A, 3/32" SHT
F3
3/32" SHT, TYP
4 3/32" PLY
F4
5 1/8" PLY
F5
3/32" SHT, TYP
6
F6
F7
1/16" SHEAR WEB TYP
GLUE FLAP SERVO TO UPPER SHEETING
7
60°
BUILD LEFT AILERON OVER THIS VIEW
SHIM 1/8" DURING ASSEMBLY FOR WASHOUT
PHOTOCOPY AND HEAT TRANSFER TO 3/32" SHT. USE MIRROR IMAGE FOR OTHER WING
BUILD LEFT FLAP OVER THIS VIEW
14
A14, 1/8" SHT
A14B, A14A
13
A13
12
A12
A11B
11
A11
A11A
10
A10
3/32" SHT, TYP
9
A9
A9B
A9A
8
A8 1/8" SHT, F8 3/32" SHT
HATCHES AND LATCHES (DUCT TAPE)
24
10
4
2
2
3
8
8
8
© RCM ALL COMMERCIAL RIGHTS RESERVED
ARADO 96B
DESIGNED AND DRAWN BY DAVID P. ANDERSEN
SHEET 4 OF 6
0" 1" 2" 3" 4" 5" 6"

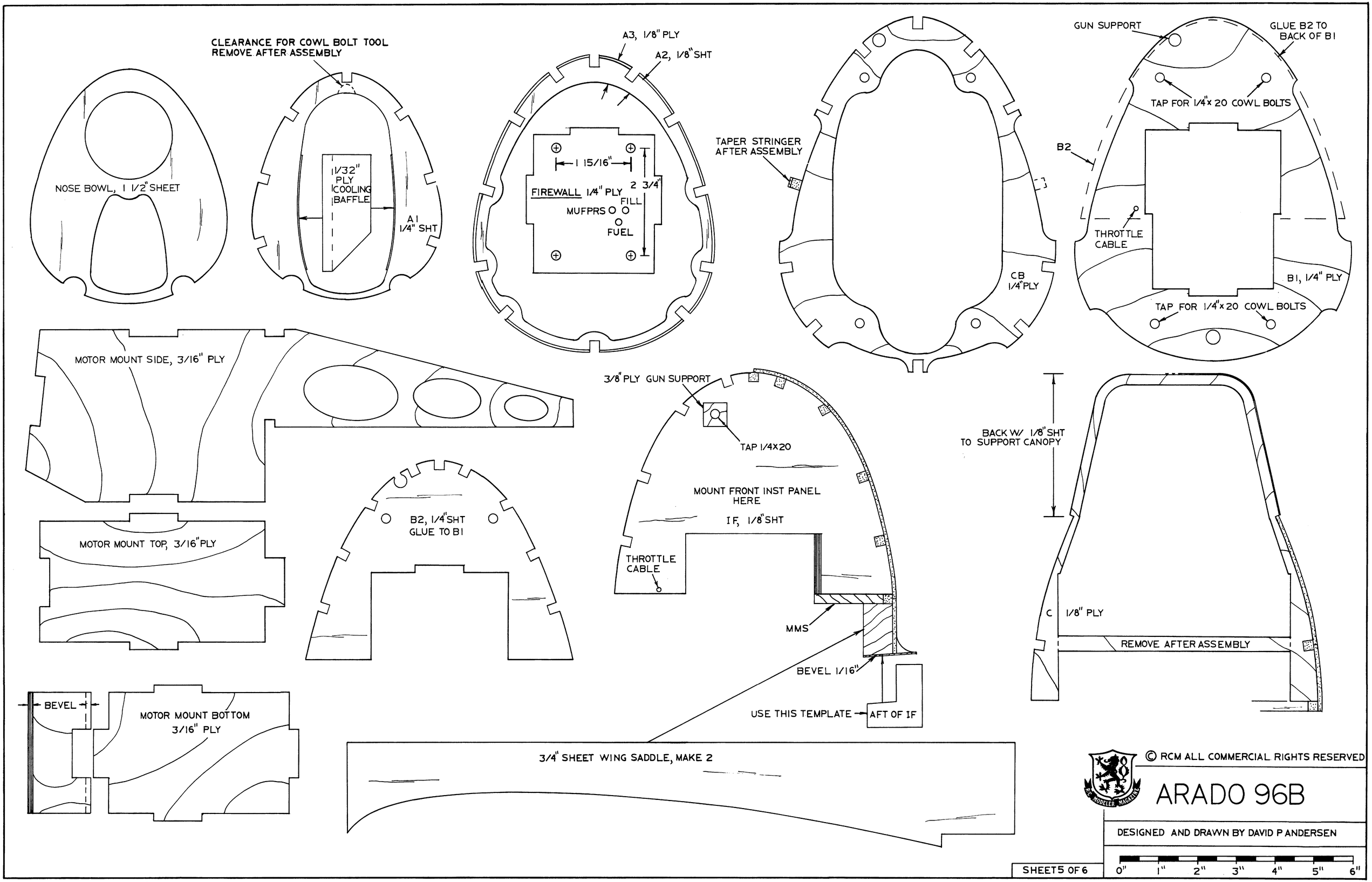
NOSE BOWL, 1 1/2" SHEET
CLEARANCE FOR COWL BOLT TOOL
REMOVE AFTER ASSEMBLY
1 1/32" PLY COOLING BAFFLE
A1 1/4" SHT
A3, 1/8" PLY
A2, 1/8" SHT
1 15/16"
2 3/4"
FIREWALL 1/4" PLY
FILL
MUFPRS
FUEL
TAPER STRINGER AFTER ASSEMBLY
CB 1/4" PLY
GUN SUPPORT
GLUE B2 TO BACK OF B1
TAP FOR 1/4"x 20 COWL BOLTS
B2
THROTTLE CABLE
B1, 1/4" PLY
TAP FOR 1/4"x 20 COWL BOLTS
MOTOR MOUNT SIDE, 3/16" PLY
MOTOR MOUNT TOP, 3/16" PLY
B2, 1/4" SHT
GLUE TO B1
3/8" PLY GUN SUPPORT
TAP 1/4X20
MOUNT FRONT INST PANEL HERE
IF, 1/8" SHT
THROTTLE CABLE
MMS
BEVEL 1/16"
USE THIS TEMPLATE
AFT OF IF
BACK W/ 1/8" SHT TO SUPPORT CANOPY
C 1/8" PLY
REMOVE AFTER ASSEMBLY
BEVEL
MOTOR MOUNT BOTTOM 3/16" PLY
3/4" SHEET WING SADDLE, MAKE 2
© RCM ALL COMMERCIAL RIGHTS RESERVED
ARADO 96B
DESIGNED AND DRAWN BY DAVID P ANDERSEN
SHEET 5 OF 6
0" 1" 2" 3" 4" 5" 6"

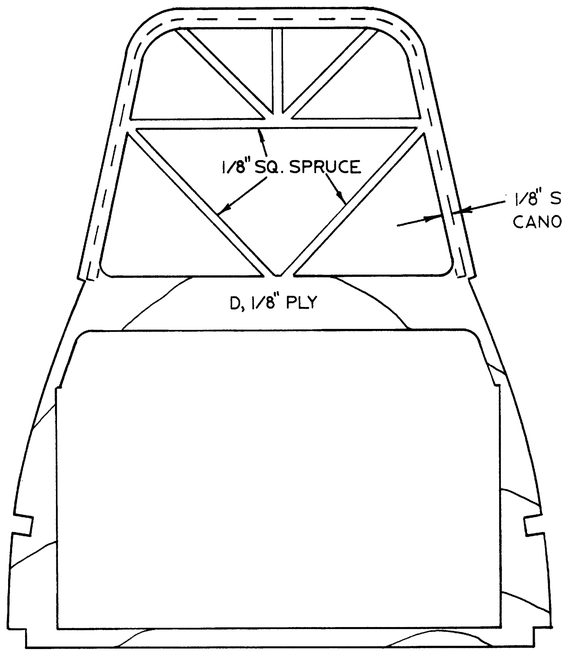

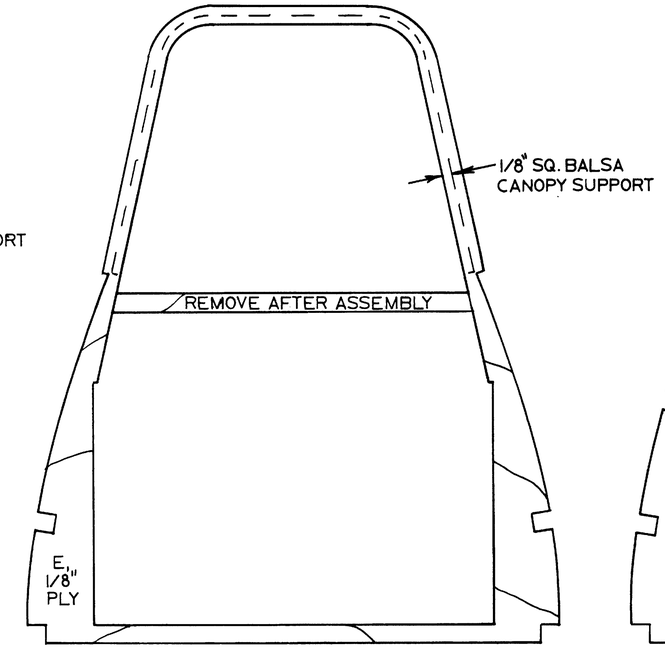

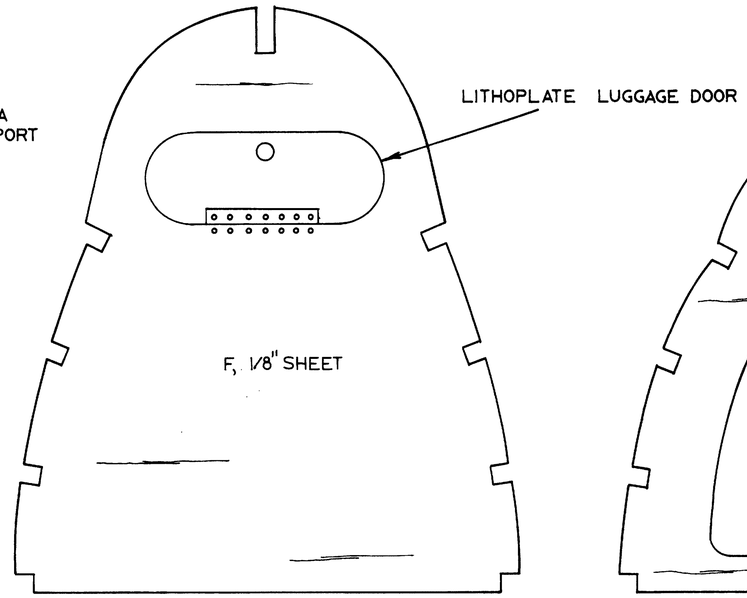

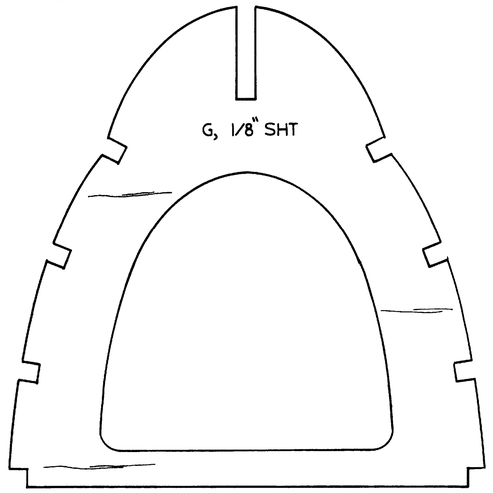

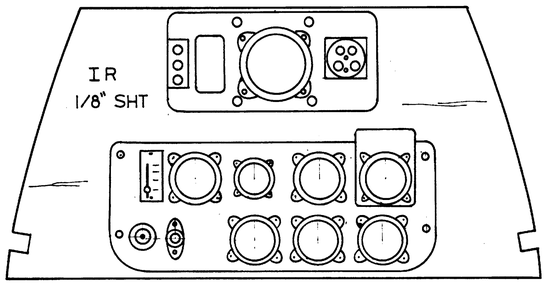

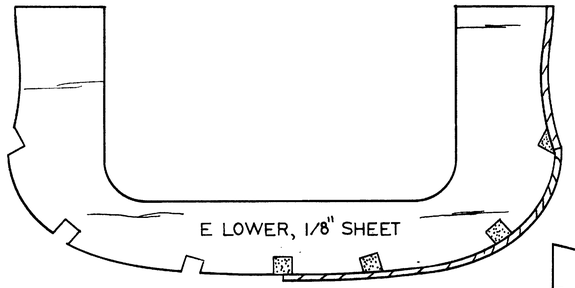

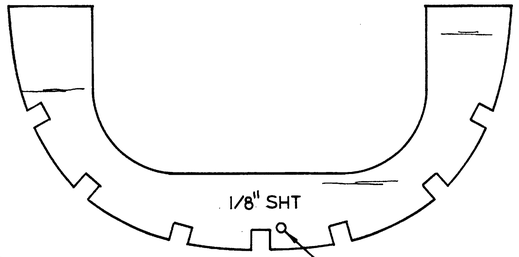

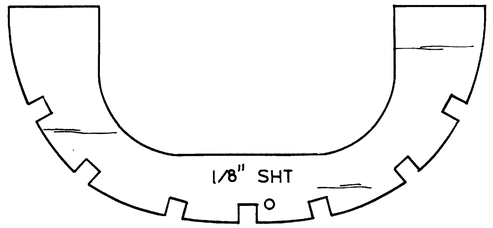

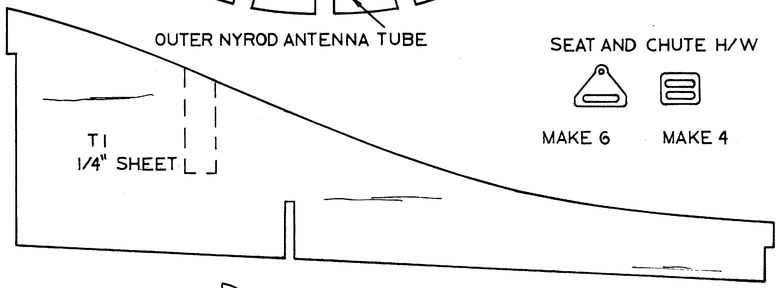

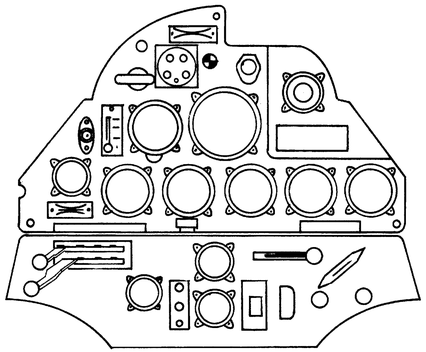

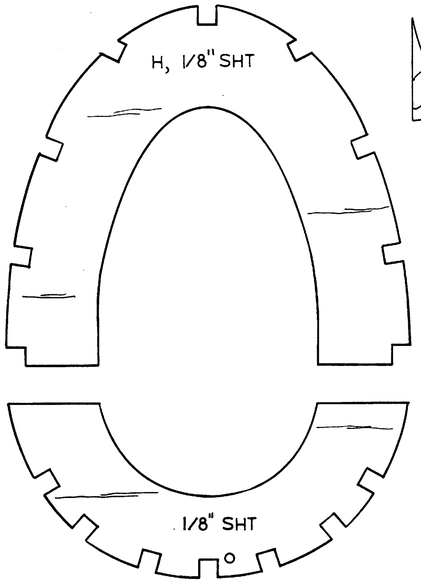

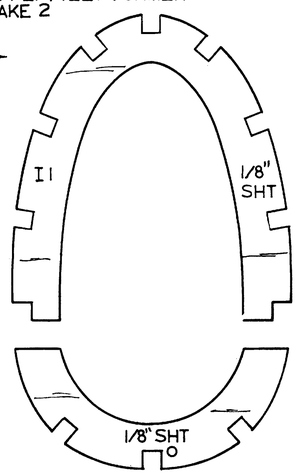

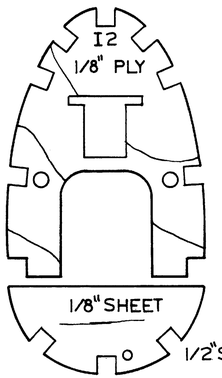

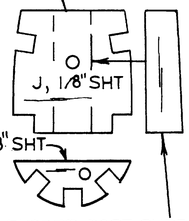

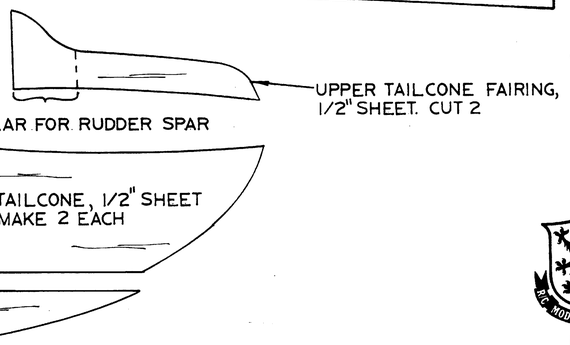

© RCM ALL COMMERCIAL RIGHTS RESERVED

ARADO 96B

DESIGNED AND DRAWN BY DAVID P. ANDERSEN

SHEET 6 OF 6

0" 1" 2" 3" 4" 5" 6"

PLAN NO. 1311