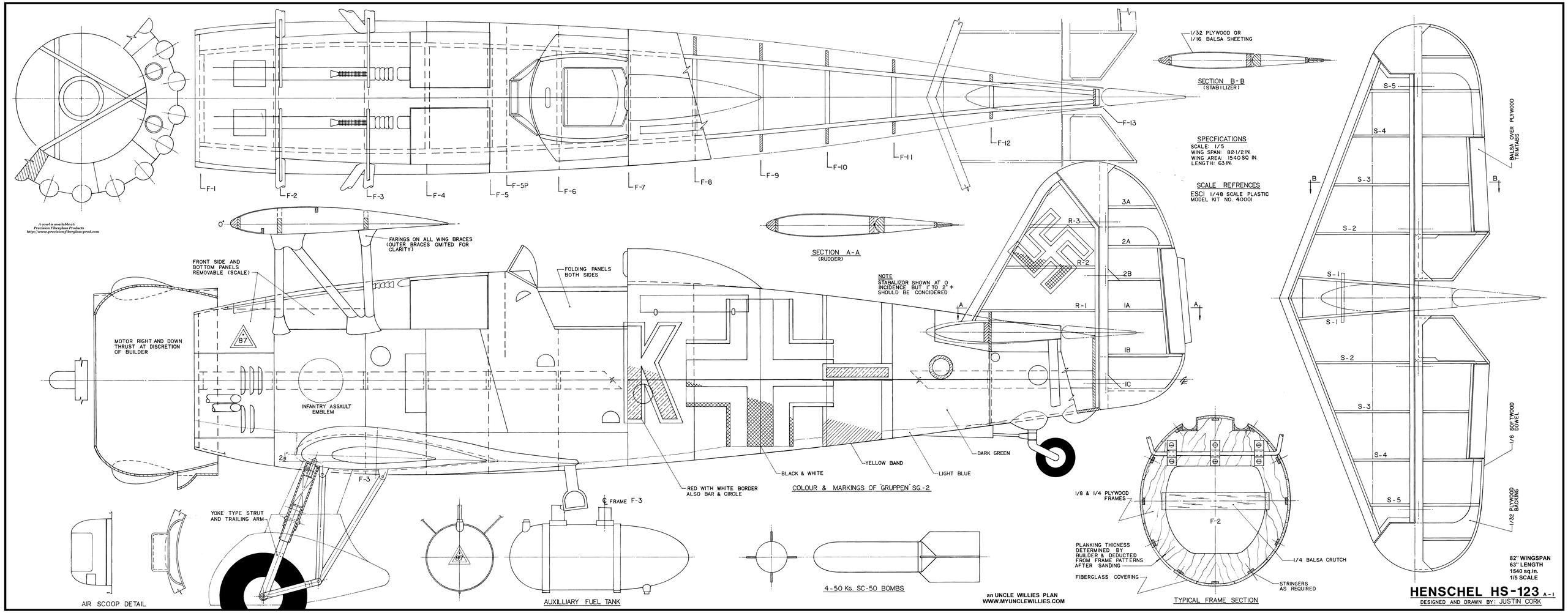
F-1
F-2
F-3
F-4
F-5
F-5P
F-6
F-7
F-8
F-9
F-10
F-11
F-12
F-13
1/32 PLYWOOD OR
1/16 BALSA SHEETING
SECTION B-B
(STABILIZER)
SPECFICATIONS
SCALE: 1/5
WING SPAN: 82 1/2 IN.
WING AREA: 1540 SQ IN.
LENGTH: 63 IN.
SCALE REFRENCES
ESCI 1/48 SCALE PLASTIC
MODEL KIT NO. 40001
S-5
S-4
S-3
S-2
S-1
B
BALSA OVER PLYWOOD
TRIMTABS
1/8 SOFTWOOD
DOWEL
1/32 PLYWOOD
BACKING
A cosel is available at:
Precision Fiberglass Products
http://www.precision-fiberglass-prod.com
0°
FARINGS ON ALL WING BRACES
(OUTER BRACES OMITED FOR
CLARITY)
SECTION A-A
(RUDDER)
FRONT SIDE AND
BOTTOM PANELS
REMOVABLE (SCALE)
FOLDING PANELS
BOTH SIDES
NOTE
STABALIZOR SHOWN AT 0
INCIDENCE BUT 1° TO 2° +
SHOULD BE CONCIDERED
3A
2A
2B
1A
1B
1C
R-3
R-2
R-1
A
MOTOR RIGHT AND DOWN
THRUST AT DISCRETION
OF BUILDER
87
INFANTRY ASSAULT
EMBLEM
2½°
F-3
YELLOW BAND
DARK GREEN
BLACK & WHITE
LIGHT BLUE
RED WITH WHITE BORDER
ALSO BAR & CIRCLE
COLOUR & MARKINGS OF "GRUPPEN" SG-2
1/8 & 1/4 PLYWOOD
FRAMES
F-2
PLANKING THICNESS
DETERMINED BY
BUILDER & DEDUCTED
FROM FRAME PATTERNS
AFTER SANDING
FIBERGLASS COVERING
1/4 BALSA CRUTCH
STRINGERS
AS REQUIRED
TYPICAL FRAME SECTION
YOKE TYPE STRUT
AND TRAILING ARM
AIR SCOOP DETAIL
℄ FRAME F-3
AUXILLIARY FUEL TANK
4-50 Kg. SC-50 BOMBS
an UNCLE WILLIES PLAN
WWW.MYUNCLEWILLIES.COM
82" WINGSPAN
63" LENGTH
1540 sq.in.
1/5 SCALE
HENSCHEL HS-123 A-1
DESIGNED AND DRAWN BY: JUSTIN CORK

82" WINGSPAN
63" LENGTH
1540 sq.in.
1/5 SCALE

CROSS BOTH SIDES BOTTOM

CROSS BOTH SIDES TOP

USE AILERON DIFFERENTIAL
MORE UP THAN DOWN

WING COLOUR SCHEME
UPPER SURFACE - DARK GREEN
LOWER SURFACE - LIGHT BLUE

50 2.12 18 EQUAL SPACES AT 1.90=34.20

WING STRUT ATTACHED
AT THIS RIB

SPARS 1/4 SPRUCE

1 1/2

HINGE DETAIL

SECTION A-A

SECTION B-B

SECTION C-C

SECTION D-D

℄ LANDING GEAR

℄ BOMBS

WING STRUT ATTACHED
AT THIS RIB

W-16 W-15 W-14 W-13 W-12 W-11 W-10 W-9 W-8 W-7 W-6 W-5 W-4 W-3 W-2 W-1 W-2 W-3 W-4 W-5 W-6 W-7 W-8 W-9 W-10 W-11 W-12 W-13 W-14 W-15 W-16

LANDING GEAR
1/4 SPRING STEEL

CORRUGATED FLAPS

CENTER BRACES NOT REQUIRED
IF SPAR IS ONE PIECE

NOTE
LEADING EDGE SHEETED TO SPAR TOP & BOTTOM
W-1 TO W-6 SHEETED TOP ONLY SPAR TO TRAILING EDGE
W-1 TO W-4 & W-8 TO W-12 BOTTOM - - -
W-4 TO W-8 FLAPS SHEETED
1/32 PLYWOOD SHOWN

an UNCLE WILLIES PLAN
WWW.MYUNCLEWILLIES.COM

HENSHEL Hs 123 A-1
SHEET 2 OF 4

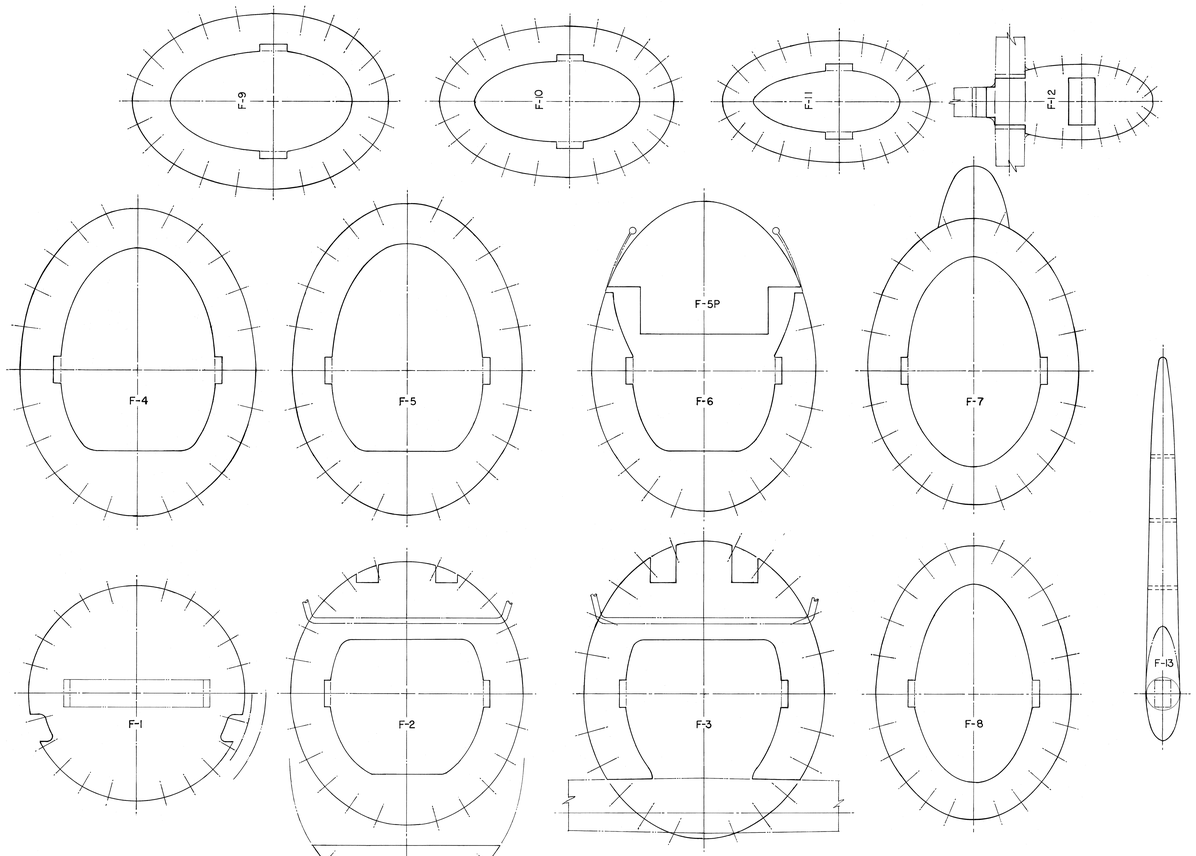

GENERAL NOTES:
1. ALL FRAME SECTIONS ARE DEVELOPED ELLIPSE.
2. LINES MARKED ------ ARE INTERSECTIONS OF ELLIPSES DEVELOPMENT. USE FOR STRINGER LOCATION.
3. DEDUCT SHEETING THICKNESS FROM FRAMES.
4. SHEETING AND FRAME MATERIAL AND SIZE AT BUILDERS DISCRETION.

HENSHEL Hs 123 A-1
SHEET 3 OF 4

an UNCLE WILLIES PLAN
WWW.MYUNCLEWILLIES.COM

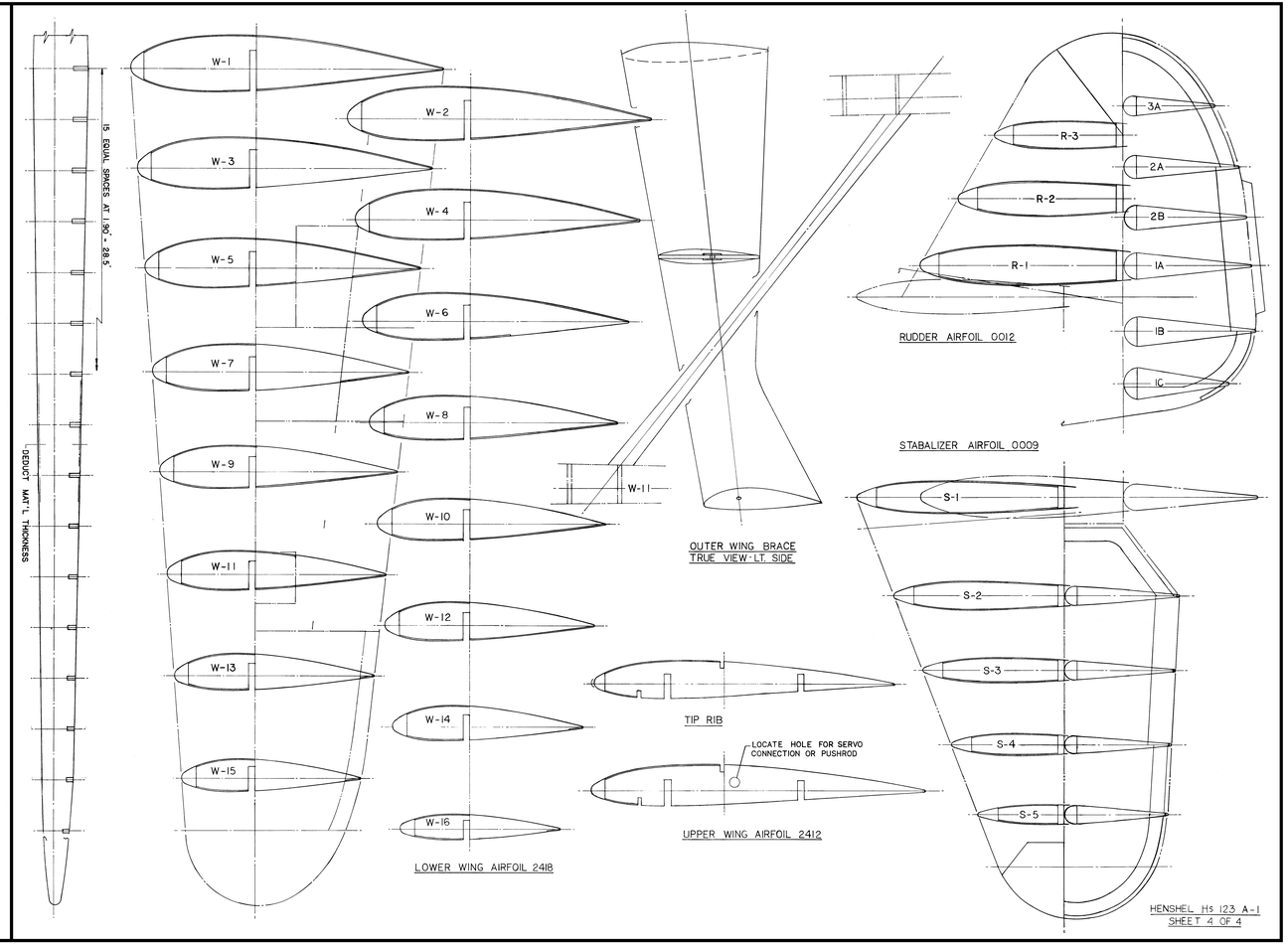

HENSHEL Hs 123 A-1
SHEET 4 OF 4